LD303 - smar

OPERATION AND MAINTENANCE
INSTRUCTION / MANUAL

Profibus PA Pressure Transmitter

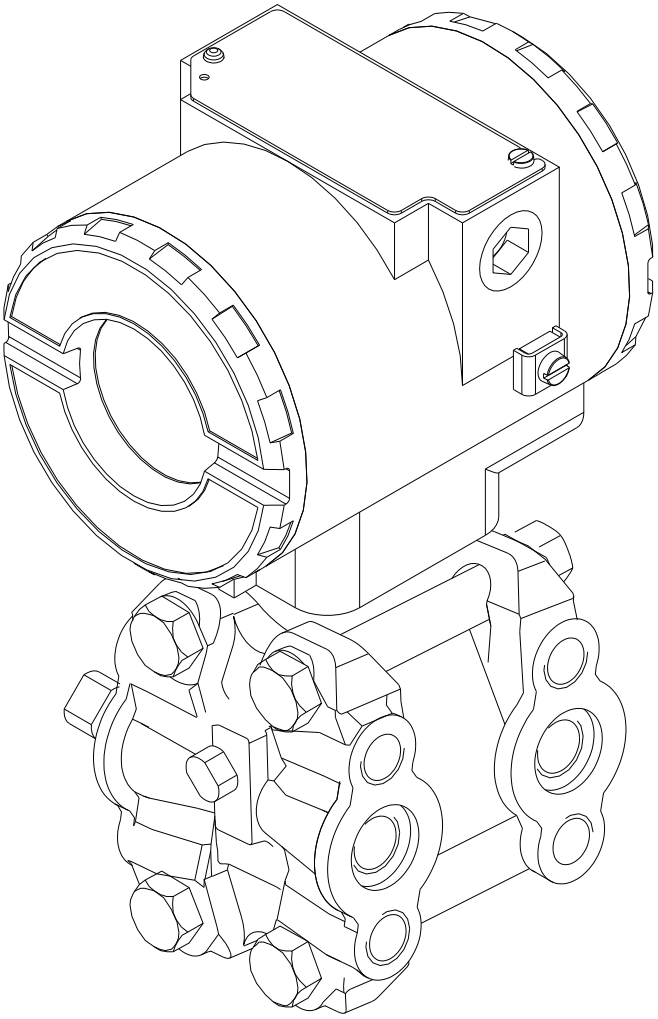

APR / 15
LD303
VERSION 3

PROFIBUS®

LD303ME

smar

www.smar.com

Specifications and information are subject to change without notice.
Up-to-date address information is available on our website.

web: www.smar.com/contactus.asp

INTRODUCTION

The **LD303** is from the first generation of Profibus-PA devices. It is a transmitter for differential, absolute and gauge pressure, level and flow measurements. It is based on a field-proven capacitive sensor that provides reliable operation and high performance. The digital technology used in the **LD303** enables the choice of several types of transfer functions, an easy interface between the field and the control room and several interesting features that considerably reduce the installation, operation and maintenance costs.

The **LD303** is part of Smar's complete 303 line of Profibus-PA devices.

Some of the advantages of bi-directional digital communications are known from existing smart transmitter protocols: Higher accuracy, multi-variable access, remote configuration and diagnostics, and multi-dropping of several devices on a single pair of wires.

The system controls variable sampling, algorithm execution and communication so as to optimize the usage of the network, not loosing time. Thus, high closed loop performance is achieved.

Using Profibus technology, with its capability to interconnect several devices, very large control schemes can be constructed. In order to be user friendly the function block concept was introduced. The **LD303**, like the rest of the 303 family, has some Function Blocks built in, like Analog Input and Totalizer Block.

The need for implementation of Fieldbus in small as well as large systems was considered when developing the entire 303 line of Profibus-PA devices. They have common features and can configured locally using a magnetic tool, eliminating the need for a configurator or console in many basic applications.

The **LD303** is available as a product on its own, but also replaces the circuit board for the LD301. They use the same sensor board. Refer to the maintenance section of this manual for instructions on upgrading. The **LD303** uses the same hardware and housing for the LD303.The **LD303** is part of SMAR's **Series 303** of Profibus-PA devices.

The **LD303**, like its predecessor LD301, has some built-in blocks, eliminating the need for a separate control device. The communication requirement is considerably reduced, and that means less dead-time and tighter control is achieved, not to mention the reduction in cost. They allow flexibility in control strategy implementation.

Get the best results of the LD303 by carefully reading these instructions.

WARNING
In case of using Simatic PDM as the configuration and parameterization tool, Smar recommends that the user does not apply the option "Download to Device". This function can improperly configure the field device. Smar recommends that user make the use of the option "Download to PG / PC" and then selecting the Device Menu, use the menus of the transducer, function and display blocks acting specifically, according to each menu and method for reading and writing.

NOTE
This Manual is compatible with version 3.XX, where 3 denotes software version and XX software release. The indication 3.XX means that this manual is compatible with any release of software version 3.

Waiver of responsibility

The contents of this manual abides by the hardware and software used on the current equipment version. Eventually there may occur divergencies between this manual and the equipment. The information from this document are periodically reviewed and the necessary or identified corrections will be included in the following editions. Suggestions for their improvement are welcome.

Warning

For more objectivity and clarity, this manual does not contain all the detailed information on the product and, in addition, it does not cover every possible mounting, operation or maintenance cases.

Before installing and utilizing the equipment, check if the model of the acquired equipment complies with the technical requirements for the application. This checking is the user's responsibility.

If the user needs more information, or on the event of specific problems not specified or treated in this manual, the information should be sought from Smar. Furthermore, the user recognizes that the contents of this manual by no means modify past or present agreements, confirmation or judicial relationship, in whole or in part.

All of Smar's obligation result from the purchasing agreement signed between the parties, which includes the complete and sole valid warranty term. Contractual clauses related to the warranty are not limited nor extended by virtue of the technical information contained in this manual.

Only qualified personnel are allowed to participate in the activities of mounting, electrical connection, startup and maintenance of the equipment. Qualified personnel are understood to be the persons familiar with the mounting, electrical connection, startup and operation of the equipment or other similar apparatus that are technically fit for their work. Smar provides specific training to instruct and qualify such professionals. However, each country must comply with the local safety procedures, legal provisions and regulations for the mounting and operation of electrical installations, as well as with the laws and regulations on classified areas, such as intrinsic safety, explosion proof, increased safety and instrumented safety systems, among others.

The user is responsible for the incorrect or inadequate handling of equipments run with pneumatic or hydraulic pressure or, still, subject to corrosive, aggressive or combustible products, since their utilization may cause severe bodily harm and/or material damages.

The field equipment referred to in this manual, when acquired for classified or hazardous areas, has its certification void when having its parts replaced or interchanged without functional and approval tests by Smar or any of Smar authorized dealers, which are the competent companies for certifying that the equipment in its entirety meets the applicable standards and regulations. The same is true when converting the equipment of a communication protocol to another. In this case, it is necessary sending the equipment to Smar or any of its authorized dealer. Moreover, the certificates are different and the user is responsible for their correct use.

Always respect the instructions provided in the Manual. Smar is not responsible for any losses and/or damages resulting from the inadequate use of its equipments. It is the user's responsibility to know and apply the safety practices in his country.

TABLE OF CONTENTS

SECTION 1 - INSTALLATION 1.1
GENERAL 1.1
HOUSING ROTATION 1.9
BUS TOPOLOGY AND NETWORK CONFIGURATION 1.11
WIRING 1.11
INTRINSIC SAFETY BARRIER 1.12
JUMPER CONFIGURATION 1.12
POWER SUPPLY 1.13
INSTALLATION IN HAZARDOUS AREAS 1.13
EXPLOSION/FLAME PROOF 1.13
INTRINSICALLY SAFE 1.13

SECTION 2 - OPERATION 2.1
FUNCTIONAL DESCRIPTION - SENSOR 2.1
FUNCTIONAL DESCRIPTION – ELECTRONICS 2.2
DISPLAY 2.3

SECTION 3 - CONFIGURATION 3.1
TRANSDUCER BLOCK 3.1
TRANSDUCER BLOCK DIAGRAM 3.2
PRESSURE TRANSDUCER BLOCK PARAMETER DESCRIPTION 3.2
PRESSURE TRANSDUCER BLOCK PARAMETER ATTRIBUTES 3.6
LD303 - CYCLIC CONFIGURATION 3.8
HOW TO CONFIGURE THE TRANSDUCER BLOCK 3.9
TABLE HANDLING 3.11
HOW TO CONFIGURE THE ANALOG INPUT BLOCK 3.15
HOW TO CONFIGURE THE TOTALIZER BLOCK 3.19
LOWER AND UPPER TRIM 3.24
PRESSURE TRIM - LD303 ..... 3.24
VIA LOCAL ADJUSTMENT 3.26
CHARACTERIZATION TRIM 3.27
SENSOR INFORMATION 3.29
TEMPERATURE TRIM 3.29
SENSOR DATA READING 3.30
TRANSDUCER DISPLAY – CONFIGURATION 3.31
DISPLAY TRANSDUCER BLOCK 3.31
DEFINITION OF PARAMETERS AND VALUES 3.32
LOCAL ADJUSTMENT TREE - QUICK GUIDE 3.35
PROGRAMMING USING LOCAL ADJUSTMENT 3.36
J1 JUMPER CONNECTION 3.37
W1 JUMPER CONNECTION 3.37

SECTION 4 - MAINTENANCE PROCEDURES 4.1
GENERAL 4.1
DISASSEMBLY PROCEDURE 4.2
SENSOR CLEANING 4.2
ELECTRONIC CIRCUIT 4.3
REASSEMBLE PROCEDURE 4.3
SENSOR MOUNTING 4.3
ELECTRONIC CIRCUIT 4.4
INTERCHANGEABILITY 4.4
UPGRADING LD301 TO LD303 ..... 4.5
RETURNING MATERIALS 4.5
SMAR INSULATOR KIT 4.9
SMAR INSULATOR KIT MOUNTING 4.9
APPLICATION WITH HALAR 4.14

TECHNICAL SPECIFICATION 4.14
PERFORMANCE SPECIFICATION 4.14
TPE – TOTAL PROBABLE ERROR (SOFTWARE) 4.14
ORDERING CODE FOR THE SENSOR 4.16

SECTION 5 - TECHNICAL CHARACTERISTIC 5.1
Technical Characteristics of High Performance - CODE L1 ..... 5.5
Ordering Code 5.6

APPENDIX A - CERTIFICATIONS INFORMATION A.1
EUROPEAN DIRECTIVE INFORMATION A.1
OTHER APPROVAL A.1
SANITARY APPROVAL A.1
IP68 REPORT: A.1
HAZARDOUS LOCATIONS CERTIFICATIONS A.1
NORTH AMERICAN CERTIFICATIONS A.2
EUROPEAN CERTIFICATIONS A.2
SOUTH AMERICA CERTIFICATION A.3
ASIA CERTIFICATION A.3
IDENTIFICATION PLATE AND CONTROL DRAWING A.3
IDENTIFICATION PLATE A.3
CONTROL DRAWING A.7

APPENDIX B – SRF – SERVICE REQUEST FORM B.1

Basic Installation Flowchart

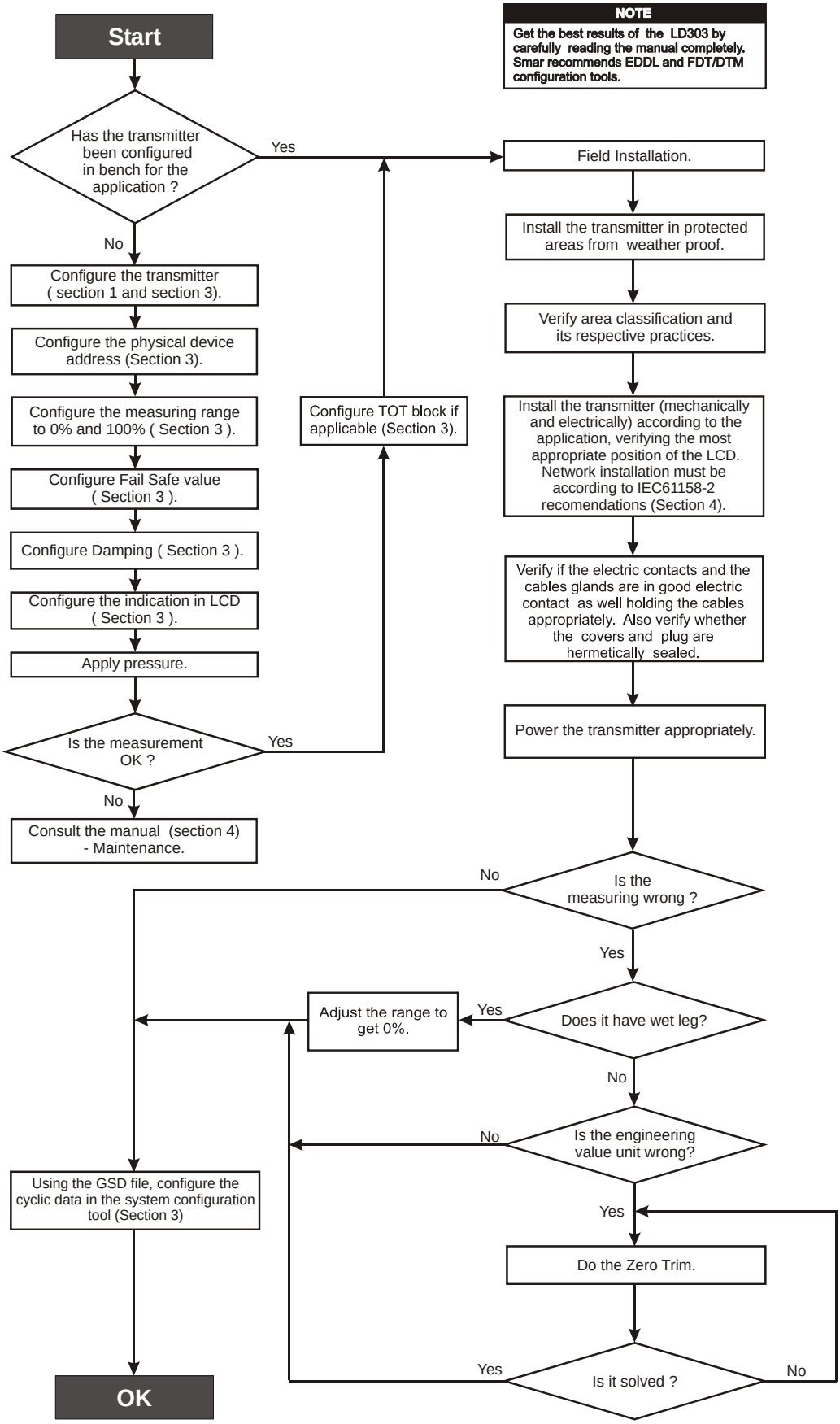

INSTALLATION

General

NOTE
The installation carried out in hazardous areas should follow the recommendations of the IEC60079-14 standard.

The overall accuracy of a flow, level, or pressure measurement depends on several variables. Although the transmitter has an outstanding performance, proper installation is essential to maximize its performance.

Among all factors, which may affect transmitter accuracy, environmental conditions are the most difficult to control. There are, however, ways of reducing the effects of temperature, humidity and vibration.

The **LD303** has a built-in temperature sensor to compensate for temperature variations. At the factory, each transmitter is submitted to a temperature cycle process, and the characteristics under different pressures and temperatures are recorded in the transmitter memory. At the field, this feature minimizes the temperature variation effect.

Locating the transmitter in areas protected from extreme environmental changes can minimize temperature fluctuation effects.

The transmitter should be installed in such a way as to avoid, as much as possible, direct exposure to the sun or any source of irradiated heat. Installation close to lines and vessels with high temperatures should also be avoided. Use longer sections of impulse piping between tap and transmitter whenever the process fluid is at high temperatures. Use of sunshades or heat shields to protect the transmitter from external heat sources should be considered.

Humidity is fatal for electronic circuits. In areas subjected to high relative humidity, the O-rings for the electronic housing covers must be correctly placed and the covers must be completely closed by tightening them by hand until the O-rings are compressed.

Do not use tools to close the covers. Removal of the electronics cover in the field should be reduced to the minimum necessary, as each time it is removed; the circuits are exposed to the humidity. The electronic circuit is protected by a humidity proof coating, but frequent exposure to humidity may affect the protection provided. It is also important to keep the covers tightened in place. Every time they are removed, the threads are exposed to corrosion, since painting cannot protect these parts. Code-approved sealing methods should be employed on conduit entering the transmitter. The unused outlet connection should be plugged accordingly.

Although the transmitter is virtually insensitive to vibration, installation close to pumps, turbines or other vibrating equipment should be avoided. Proper winterization (freeze protection) should be employed to prevent freezing within the measuring chamber, since this will result in an inoperative transmitter and could even damage the cell.

NOTE
When installing or storing the level transmitter, the diaphragm must be protected to avoid scratching-denting or perforation of its surface.

The transmitter has been designed to be both rugged and lightweight at the same time. This makes its mounting easier; mounting positions are shown in Figure 1.1.

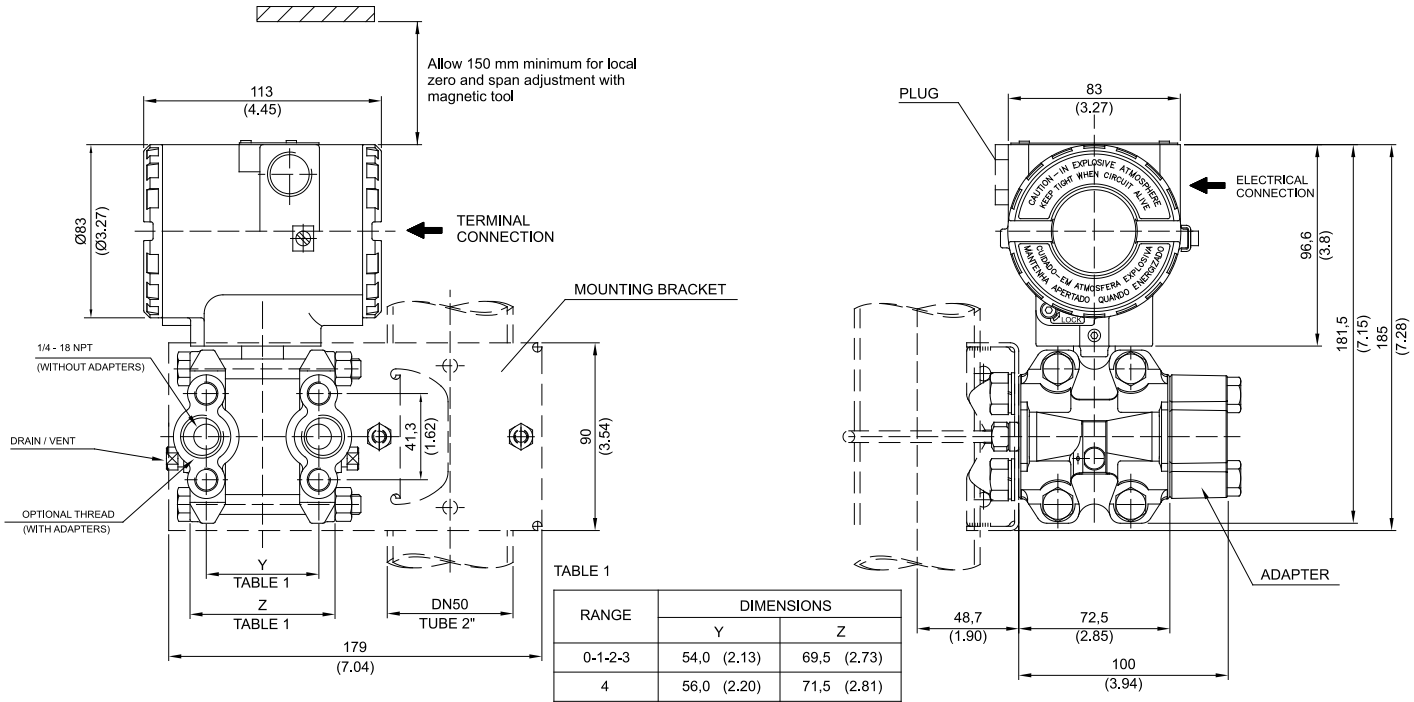

TABLE 1

RANGE	DIMENSIONS	
	Y	Z
0-1-2-3	54,0 (2.13)	69,5 (2.73)
4	56,0 (2.20)	71,5 (2.81)
5	58,3 (2.30)	73,8 (2.90)
6	58,7 (2.31)	74,2 (2.92)

Figure 1.1 (a) – Dimensional Drawing and Mounting Position - Differential, Flow, Gage, Absolute and High Static Pressure Transmitters with Mounting Bracket

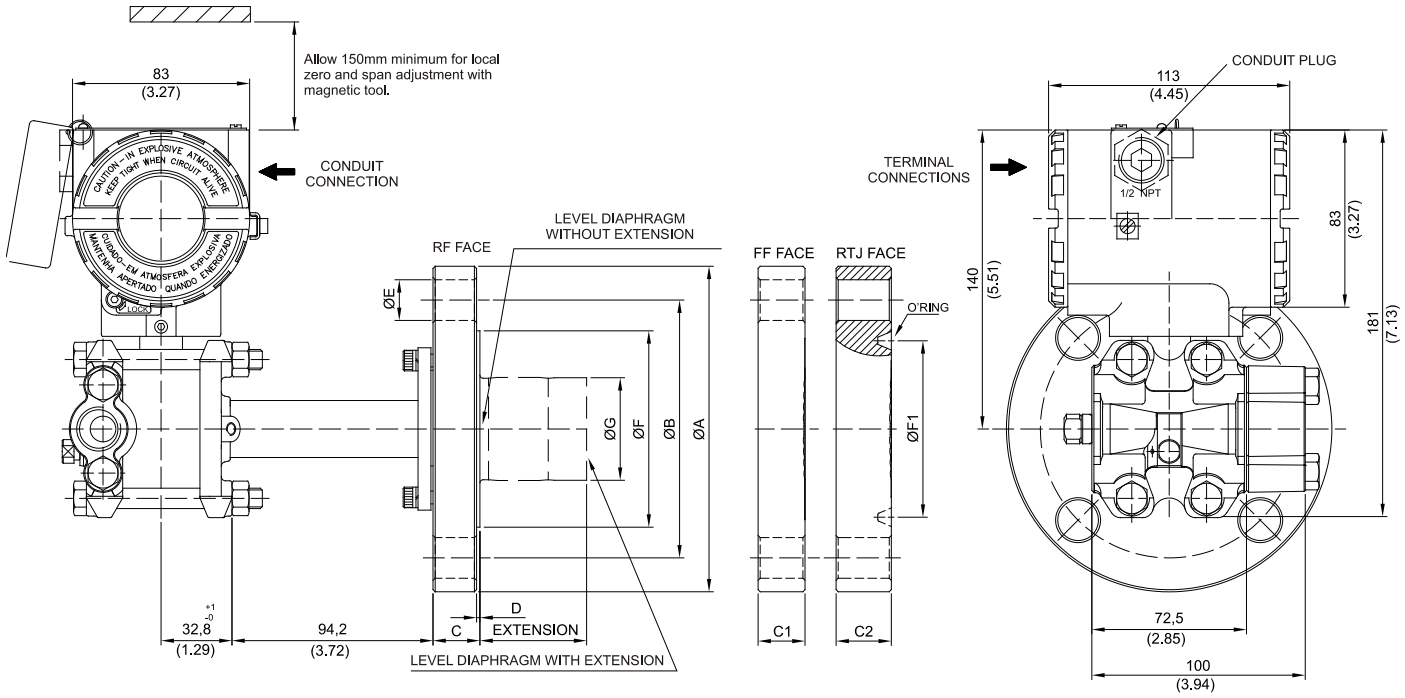

Notes:
- Extension lenght (mm): 0, 50, 100, 150 or 200
- Dimensions are mm (in)

ANSI-B 16.5 DIMENSIONS														
DN	CLASS	A	B	C (RF)	C1 (FF)	C2 (RTJ)	D (RF)	E	F (RF)	F1 (RTJ)	RTJ O'RING	G	HOLES
1.1/2"	150	127 (5)	98.6 (3.88)	20 (0.78)	19 (0.75)	24.4 (0.96)	1.6 (0.06)	16 (0.63)	73.2 (2.88)	65.1 (2.56)	R19	40 (1.57)	4
	300	155.4 (6.12)	114.3 (4.5)	21 (0.83)	21 (0.83)	27.4 (1.07)	1.6 (0.06)	22 (0.87)	73.2 (2.88)	68.3 (2.68)	R20	40 (1.57)	4
	600	155.4 (6.12)	114.3 (4.5)	29.3 (1.15)	29.3 (1.15)	29.3 (1.15)	6.4 (0.25)	22 (0.87)	73.2 (2.88)	68.3 (2.68)	R20	40 (1.57)	4
2"	150	152.4 (6)	120.7 (4.75)	22 (0.87)	20 (0.78)	25.9 (1.02)	1.6 (0.06)	19 (0.75)	91.9 (3.62)	82.6 (3.25)	R22	48 (1.89)	4
	300	165.1 (6.5)	127 (5)	22.8 (0.9)	22.8 (0.89)	30.8 (1.21)	1.6 (0.06)	19 (0.75)	91.9 (3.62)	82.6 (3.25)	R23	48 (1.89)	8
	600	165.1 (6.5)	127 (5)	32.3 (1.27)	32.3 (1.27)	32.3 (1.27)	6.4 (0.25)	19 (0.75)	91.9 (3.62)	82.6 (3.25)	R23	48 (1.89)	8
3"	150	190.5 (7.5)	152.4 (6)	24.4 (0.96)	24.4 (0.96)	30.7 (1.21)	1.6 (0.06)	19 (0.75)	127 (5)	114.3 (4.50)	R29	73 (2.87)	4
	300	209.5 (8.25)	168.1 (6.62)	29 (1.14)	29 (1.14)	36.9 (1.45)	1.6 (0.06)	22 (0.87)	127 (5)	123.8 (4.87)	R31	73 (2.87)	8
	600	209.5 (8.25)	168.1 (6.62)	38.7 (1.52)	38.7 (1.52)	40.2 (1.58)	6.4 (0.25)	22 (0.87)	127 (5)	123.8 (4.87)	R31	73 (2.87)	8
4"	150	228.6 (9)	190.5 (7.5)	24.4 (0.96)	24.4 (0.96)	30.7 (1.21)	1.6 (0.06)	19 (0.75)	158 (6.22)	149.2 (5.87)	R36	96 (3.78)	8
	300	254 (10)	200 (7.87)	32.2 (1.27)	32.2 (1.27)	40.2 (1.58)	1.6 (0.06)	22 (0.87)	158 (6.22)	149.2 (5.87)	R37	96 (3.78)	8
	600	273 (10.75)	215.9 (8.5)	45 (1.77)	45 (1.77)	46.5 (1.83)	6.4 (0.25)	25 (1)	158 (6.22)	149.2 (5.87)	R37	96 (3.78)	8

EN 1092-1 DIMENSIONS												
DN	PN	A	B	C (RF)	C1 (FF)		D	E	F (RF)		G	HOLES
DN40	10/40	150 (5.9)	110 (4.33)	20 (0.78)	20 (0.78)		3 (0.12)	18 (0.71)	88 (3.46)		40 (1.57)	4
DN50	10/40	165 (6.5)	125 (4.92)	20 (0.78)	22 (0.86)		3 (0.12)	18 (0.71)	102 (4.01)		48 (1.89)	4
DN80	10/40	200 (7.87)	160 (6.3)	24 (0.95)	24 (0.94)		3 (0.12)	18 (0.71)	138 (5.43)		73 (2.87)	8
DN100	10/16	220 (8.67)	180 (7.08)	20 (0.78)			3 (0.12)	18 (0.71)	158 (6.22)		96 (3.78)	8
	25/40	235 (9.25)	190 (7.5)	24 (0.95)			3 (0.12)	22 (0.87)	162 (6.38)		96 (3.78)	8

JIS B 2202 DIMENSIONS											
DN	CLASS	A	B	C		D	E	F (RF)		G	HOLES
40A	20K	140 (5.5)	105 (4.13)	26 (1.02)		2 (0.08)	19 (0.75)	81 (3.2)		40 (1.57)	4
50A	10K	155 (6.1)	120 (4.72)	26 (1.02)		2 (0.08)	19 (0.75)	96 (3.78)		48 (1.89)	4
	40K	165 (6.5)	130 (5.12)	26 (1.02)		2 (0.08)	19 (0.75)	105 (4.13)		48 (1.89)	8
80A	10K	185 (7.28)	150 (5.9)	26 (1.02)		2 (0.08)	19 (0.75)	126 (4.96)		73 (2.87)	8
	20K	200 (7.87)	160 (6.3)	26 (1.02)		2 (0.08)	19 (0.75)	132 (5.2)		73 (2.87)	8
100A	10K	210 (8.27)	175 (6.89)	26 (1.02)		2 (0.08)	19 (0.75)	151 (5.95)		96 (3.78)	8

Figure 1.1 (b) – Dimensional Drawing and Mounting Position - Flanged Pressure Transmitter with Integral Flange

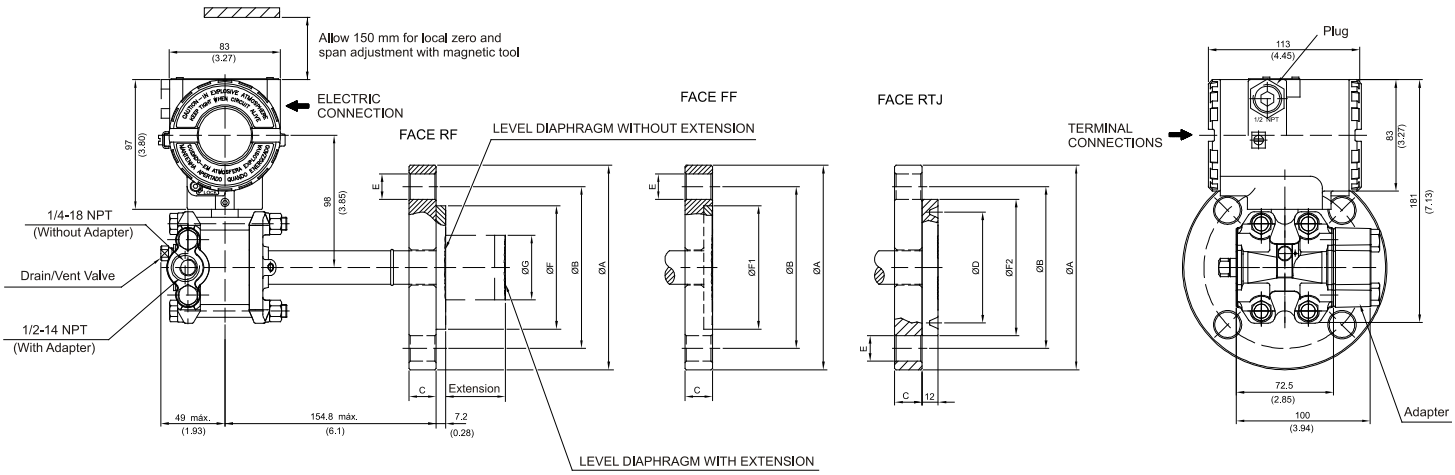

ANSI-B 16.5 DIMENSIONS											
DN	CLASS	A	B	C	D	E	F (RF)	F1 (FF)	F2 (RTJ)	G	HOLES
1"	150	108 (4.25)	79.4 (3.16)	14.3 (0.56)	-	16 (0.63)	50.8 (2)	50.8 (2)	-	-	4
	300/600	124 (4.88)	88.9 (3.5)	17.5 (0.69)	-	19 (0.75)	50.8 (2)	50.8 (2)	-	-	4
1 1/2"	150	127 (5)	98.4 (3.87)	17.5 (0.69)	-	16 (0.63)	73 (2.87)	73 (2.87)	-	40 (1.57)	4
	300/600	156 (6.14)	114.3 (4.5)	22.2 (0.87)	-	22 (0.87)	73 (2.87)	73 (2.87)	-	40 (1.57)	4
2"	150	152.4 (6)	120.7 (4.75)	17.5 (0.69)	82.6 (3.25)	19 (0.75)	92 (3.62)	92 (3.62)	101.6 (4.00)	48 (1.89)	4
	300	165.1 (6.5)	127 (5)	20.7 (0.8)	82.6 (3.25)	19 (0.75)	92 (3.62)	92 (3.62)	107.9 (4.25)	48 (1.89)	8
	600	165.1 (6.5)	127 (5)	25.4 (1)	82.6 (3,25)	19 (0.75)	92 (3.62)	92 (3.62)	107.9 (4.25)	48 (1.89)	8
3"	150	190.5 (7.5)	152.4 (6)	22.3 (0.87)	114.3 (4.50)	19 (0.75)	127 (5)	127 (5)	133.4 (5.25)	73 (2.87)	4
	300	209.5 (8.25)	168.1 (6.62)	27 (1.06)	123.8 (4.87)	22 (0.87)	127 (5)	127 (5)	146.1 (5.75)	73 (2.87)	8
	600	209.5 (8.25)	168.1 (6.62)	31.8 (1.25)	123.8 (4.87)	22 (0.87)	127 (5)	127 (5)	146.1 (5.75)	73 (2.87)	8
4"	150	228.6 (9)	190.5 (7.5)	22.3 (0.87)	149.2 (5.87)	19 (0.75)	158 (6.22)	158 (6.22)	171.5 (6.75)	89 (3.5)	8
	300	254 (10)	200 (7.87)	30.2 (1.18)	149.2 (5.87)	22 (0.87)	158 (6.22)	158 (6.22)	174.6 (6.87)	89 (3.5)	8
	600	273 (10.75)	215.9 (8.5)	38.1 (1.5)	149.2 (5.87)	25 (1)	158 (6.22)	158 (6.22)	174.6 (6.87)	89 (3.5)	8

EN 1092-1 / DIN2501 DIMENSIONS - RF/ FF								
DN	PN	A	B	C	E	F	G	HOLES
25	10/40	115 (4.53)	85 (3.35)	18 (0.71)	14 (0.55)	68 (2.68)	-	4
40	10/40	150 (5.91)	110 (4.33)	18 (0.71)	18 (0.71)	88 (3.46)	73 (2.87)	4
50	10/40	165 (6.50)	125 (4.92)	20 (0.78)	18 (0.71)	102 (4.01)	48 (1.89)	4
80	10/40	200 (7.87)	160 (6.30)	24 (0.95)	18 (0.71)	138 (5.43)	73 (2.87)	8
100	10/16	220 (8.67)	180 (7.08)	20 (0.78)	18 (0.71)	158 (6.22)	89 (3.5)	8
	25/40	235 (9.25)	190 (7.50)	24 (0.95)	22 (0.87)	162 (6.38)	89 (3.5)	8

NOTES:
-EXTENSION LENGTH IN mm(in): 0, 50 (1.96), 100 (3.93), 150(5.9) or 200 (7.87)
-DIMENSIONS IN mm(in)

Figure 1.1 (c) – Dimensional Drawing and Mounting Position - Flanged Pressure Transmitter with Slip-on Flange

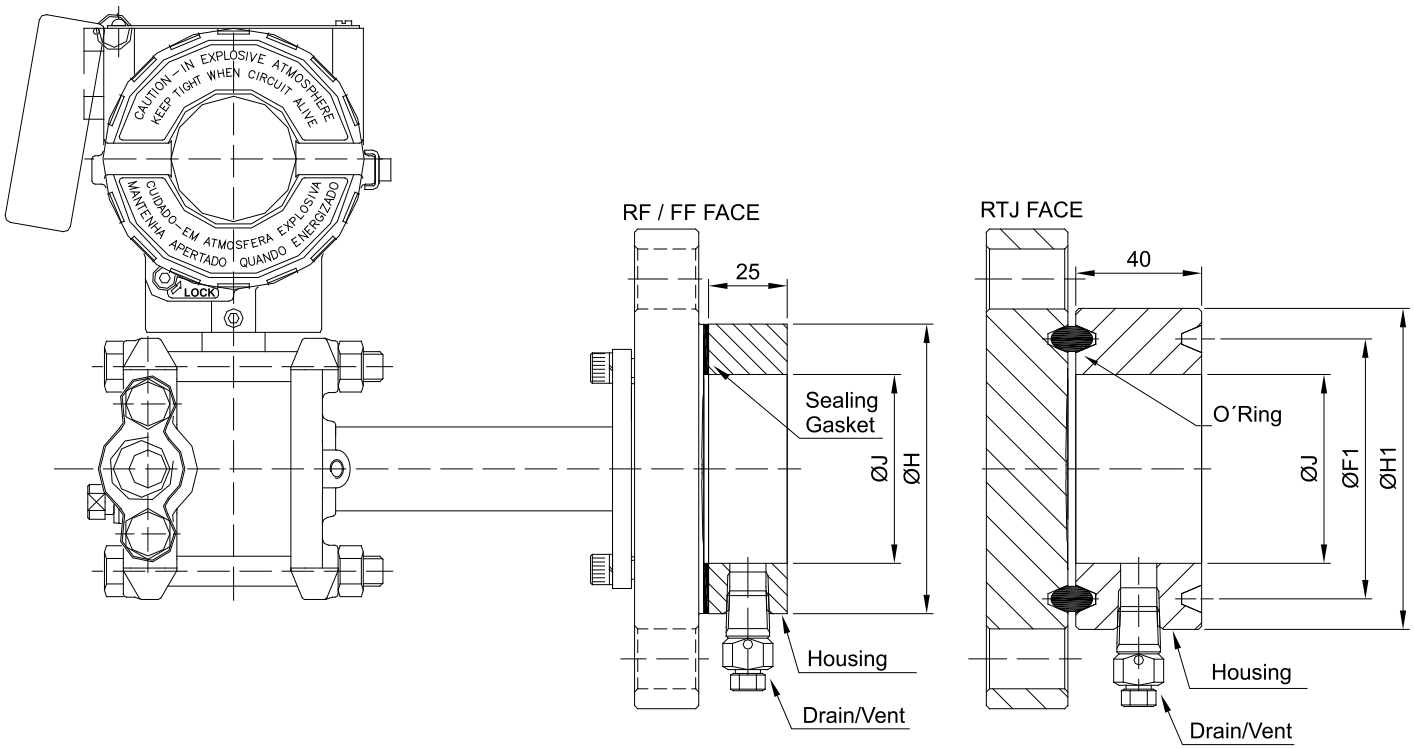

DIMENSIONS IN mm (")

ANSI-B 16.5 DIMENSIONS			
DN	CLASS	H	J
1.1/2"	ALL	73,2 (2,88)	48 (1,89)
2"		91,9 (3,62)	60 (2,36)
3"		127 (5,00)	89 (3,50)
4"		158 (6,22)	115 (4,53)
DIN EN1092-1/ DIN2501/2526 FORM D DIMENSIONS			
DN	PN	H	J
40	ALL	88 (3,46)	48 (1,89)
50		102 (4,02)	60 (2,36)
80		138 (5,43)	89 (3,50)
100		158 (6,22)	115 (4,53)
JIS B 2202 DIMENSIONS			
DN	CLASS	H	J
40A	20K	81 (3,19)	48 (1,89)
50A	10K	96 (3,78)	60 (1,36)
	40K	105 (4,13)	60 (1,36)
80A	10K	126 (4,96)	89 (3,50)
	20K	132 (5,20)	89 (3,50)
100A	10K	151 (5,94)	115 (4,53)

DIMENSIONS IN mm (")

ANSI-B 16.5 DIMENSIONS - RTJ FACE					
DN	CLASS	F1	O`RING	H1	J
1.1/2"	150	65,1 (2,56)	R19	82,5 (3,25)	48 (1,89)
	300	68,3 (2,69)	R20	90,5 (3,56)	48 (1,89)
	600	68,3 (2,69)	R20	90,5 (3,56)	48 (1,89)
	1500	68,3 (2,69)	R20	92 (3,62)	48 (1,89)
	2500	82,6 (3,25)	R23	114 (4,50)	48 (1,89)
2"	150	82,6 (3,25)	R22	102 (4,00)	60 (2,36)
	300	82,6 (3,25)	R23	108 (4,25)	60 (2,36)
	600	82,6 (3,25)	R23	108 (4,25)	60 (2,36)
	1500	95,3 (3,75)	R24	124 (4,88)	60 (2,36)
	2500	101,6 (4,00)	R26	133 (5,25)	60 (2,36)
3"	150	114,3 (4,50)	R29	133 (5,25)	89 (3,50)
	300	123,8 (4,87)	R31	146 (5,75)	89 (3,50)
	600	123,8 (4,87)	R31	146 (5,75)	89 (3,50)
4"	150	149,2 (5,87)	R36	171 (6,75)	115 (4,53)
	300	149,2 (5,87)	R37	175 (6,88)	115 (4,53)
	600	149,2 (5,87)	R37	175 (6,88)	115 (4,53)

Figure 1.1 (d) – Dimensional Drawing and Mounting Position - Flanged Pressure Transmitter with Housing

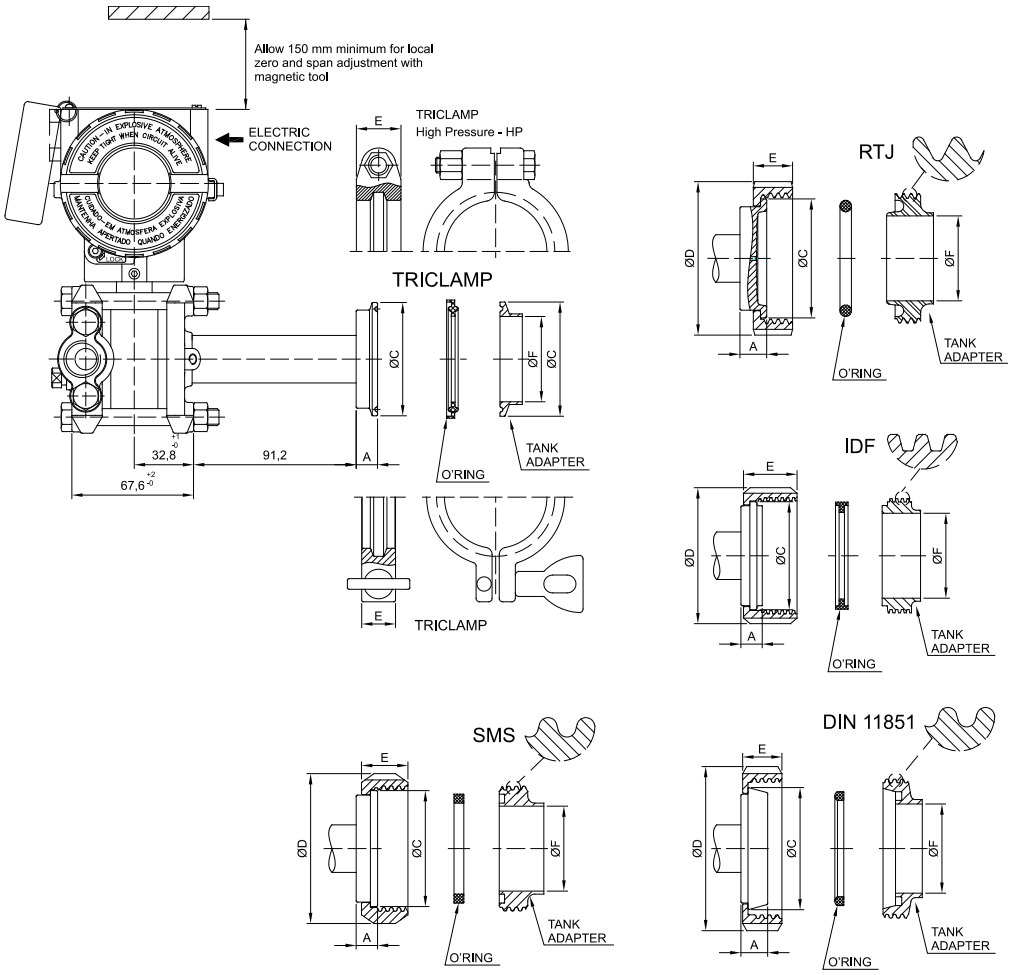

LD300S							
CONNECTION WITHOUT EXTENSION	Dimensions in mm (")						
	A	ØC	ØD	E	ØF	ØG	EXT.
Tri-Clamp DN50	8 (0.315)	63.5 (2.5)	76.5 (3.01)	18 (0.71)	47.5 (1.87)	---	---
Tri-Clamp - 1 1/2"	12 (0.47)	50 (1.96)	61 (2.4)	18 (0.71)	35 (1.38)	---	---
Tri-Clamp - 1 1/2" HP	12 (0.47)	50 (1.96)	66 (2.59)	25 (0.98)	35 (1.38)	---	---
Tri-Clamp - 2"	12 (0.47)	63.5 (2.5)	76.5 (3.01)	18 (0.71)	47.6 (1.87)	---	---
Tri-Clamp - 2" HP	12 (0.47)	63.5 (2.5)	81 (3.19)	25 (0.98)	47.6 (1.87)	---	---
Tri-Clamp - 3"	12 (0.47)	91 (3.58)	110 (4.33)	18 (0.71)	72 (2.83)	---	---
Tri-Clamp - 3" HP	12 (0.47)	91 (3.58)	115 (4.53)	25 (0.98)	72 (2.83)	---	---
Threaded DN40 - DIN 11851	13 (0.51)	56 (2.2)	78 (3.07)	21 (0.83)	38 (1.5)	---	---
Threaded DN50 - DIN 11851	15 (0.59)	68.5 (2.7)	92 (3.62)	22 (0.86)	50 (1.96)	---	---
Threaded DN80 - DIN 11851	16 (0.63)	100 (3.94)	127 (5)	29 (1.14)	81 (3.19)	---	---
Threaded SMS - 1 1/2"	12 (0.47)	55 (2.16)	74 (2.91)	25 (0.98)	35 (1.38)	---	---
Threaded SMS - 2"	12 (0.47)	65 (2.56)	84 (3.3)	26 (1.02)	48.6 (1.91)	---	---
Threaded SMS - 3"	12 (0.47)	93 (3.66)	113 (4.45)	32 (1.26)	73 (2.87)	---	---
Threaded RJT - 2"	15 (0.59)	66.7 (2.63)	86 (3.38)	22 (0.86)	47.6 (1.87)	---	---
Threaded RJT - 3"	15 (0.59)	92 (3.62)	112 (4.41)	22.2 (0.87)	73 (2.87)	---	---
Threaded IDF - 2"	12 (0.47)	60.5 (2.38)	76 (2.99)	30 (1.18)	47.6 (1.87)	---	---
Threaded IDF - 3"	12 (0.47)	87.5 (3.44)	101.6 (4)	30 (1.18)	73 (2.87)	---	---

Figure 1.1 (e) – Dimensional Drawing and Mounting Position - Sanitary Transmitter without Extension

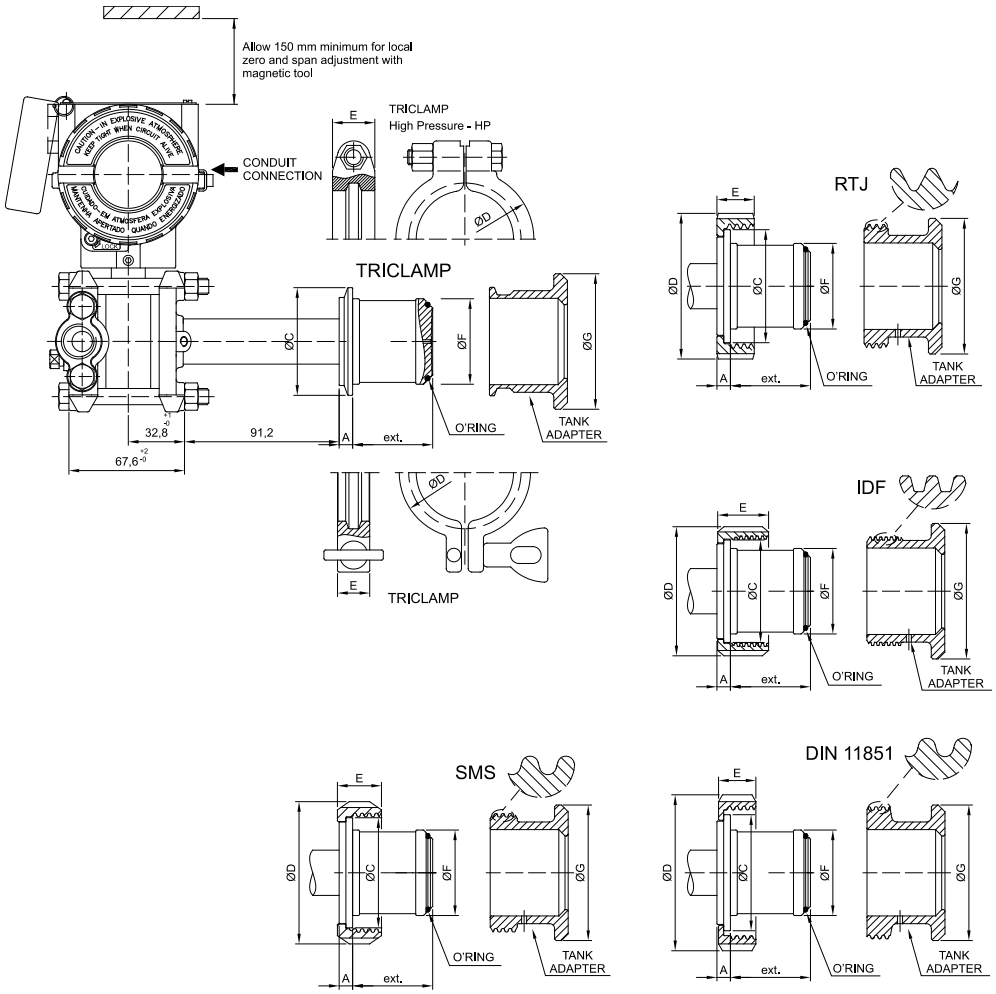

LD300S							
CONNECTION WITH EXTENSION	Dimensions in mm (")						
	A	ØC	ØD	E	ØF	ØG	EXT.
Tri-Clamp DN50	8 (0.315)	63.5 (2.5)	76.5 (3.01)	18 (0.71)	50.5 (1.99)	80 (3.15)	48 (1.89)
Tri-Clamp DN50 HP	8 (0.315)	63.5 (2.5)	81 (3.19)	25 (0.98)	50.5 (1.99)	80 (3.15)	48 (1.89)
Tri-Clamp - 2"	8 (0.315)	63.5 (2.5)	76.5 (3.01)	18 (0.71)	50.5 (1.99)	80 (3.15)	48 (1.89)
Tri-Clamp - 2" HP	8 (0.315)	63.5 (2.5)	81 (3.19)	25 (0.98)	50.5 (1.99)	80 (3.15)	48 (1.89)
Tri-Clamp - 3"	8 (0.315)	91 (3.58)	110 (4.33)	18 (0.71)	72.5 (2.85)	100 (3.94)	50 (1.96)
Tri-Clamp - 3" HP	8 (0.315)	91 (3.58)	115 (4.53)	25 (0.98)	72.5 (2.85)	100 (3.94)	50 (1.96)
Threaded DN25 - DIN 11851	6 (0.24)	47.5 (1.87)	63 (2.48)	21 (0.83)	43.2 (1.7)	80 (3.15)	26.3 (1.03)
Threaded DN40 - DIN 11851	8 (0.315)	56 (2.2)	78 (3.07)	21 (0.83)	50.5 (1.99)	80 (3.15)	48 (1.89)
Threaded DN50 - DIN 11851	8 (0.315)	68.5 (2.7)	92 (3.62)	22 (0.86)	50.5 (1.99)	80 (3.15)	48 (1.89)
Threaded DN80 - DIN 11851	8 (0.315)	100 (3.94)	127 (5)	29 (1.14)	72.5 (2.85)	100 (3.94)	50 (1.96)
Threaded SMS - 2"	8 (0.315)	65 (2.56)	84 (3.3)	26 (1.02)	50.5 (1.99)	80 (3.15)	48 (1.89)
Threaded SMS - 3"	8 (0.315)	93 (3.66)	113 (4.45)	32 (1.26)	72.5 (2.85)	100 (3.94)	50 (1.96)
Threaded RJT - 2"	8 (0.315)	66.7 (2.63)	86 (3.38)	22 (0.86)	50.5 (1.99)	80 (3.15)	48 (1.89)
Threaded RJT - 3"	8 (0.315)	92 (3.62)	112 (4.41)	22.2 (0.87)	72.5 (2.85)	100 (3.94)	50 (1.96)
Threaded IDF - 2"	8 (0.315)	60.5 (2.38)	76.2 (3)	30 (1.18)	50.5 (1.99)	80 (3.15)	48 (1.89)
Threaded IDF - 3"	8 (0.315)	87.5 (3.44)	101.6 (4)	30 (1.18)	72.5 (2.85)	100 (3.94)	50 (1.96)

Figure 1.1 (f) – Dimensional Drawing and Mounting Position - Sanitary Transmitter with Extension

Existing standards for the manifolds have also been taken into account, and standard designs fit perfectly to the transmitter flanges.

Should the process fluid contain solids in suspension, install valves or rod-out fittings at regular intervals to clean out the pipes.

The pipes should be internally cleaned by using steam or compressed air, or by draining the line with the process fluid, before such lines are connected to the transmitter (blow-down). Do not allow steam to enter the measuring chamber. Observe operating safety rules during wiring, draining or blow-down**.**

Some examples of installation, illustrating the position of the transmitter in relation to the taps, are shown in Figure 1.3. The location of pressure taps and the relative position of the transmitter are indicated in Table 1.1.

Process Fluid	Location of Taps	Best Location for the LD303 in Relation to the Taps
Gas	Top or Side	Above the Taps
Liquid	Side	Below the Taps or at the Piping Centerline
Steam	Side	Below the Taps using Sealing (Condensate) Pots

Table 1.1 - Location of Pressure Taps

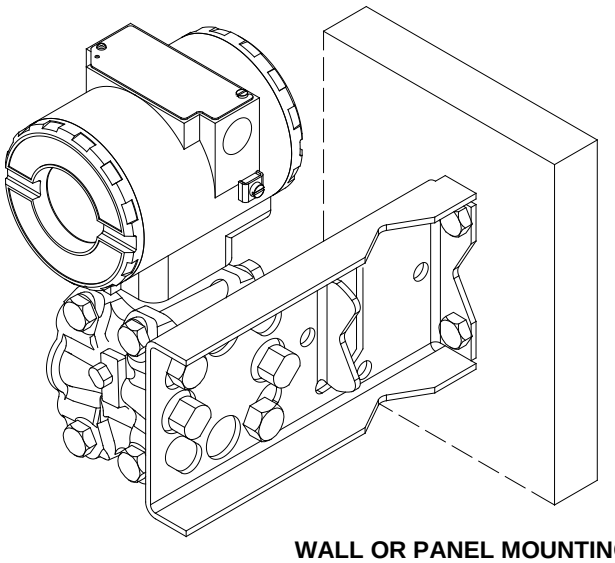

WALL OR PANEL MOUNTING
(See section 5 – spare parts list for mounting brackets available)

Figure 1.2 – Drawing Mounting of LD303 on the Panel or Wall

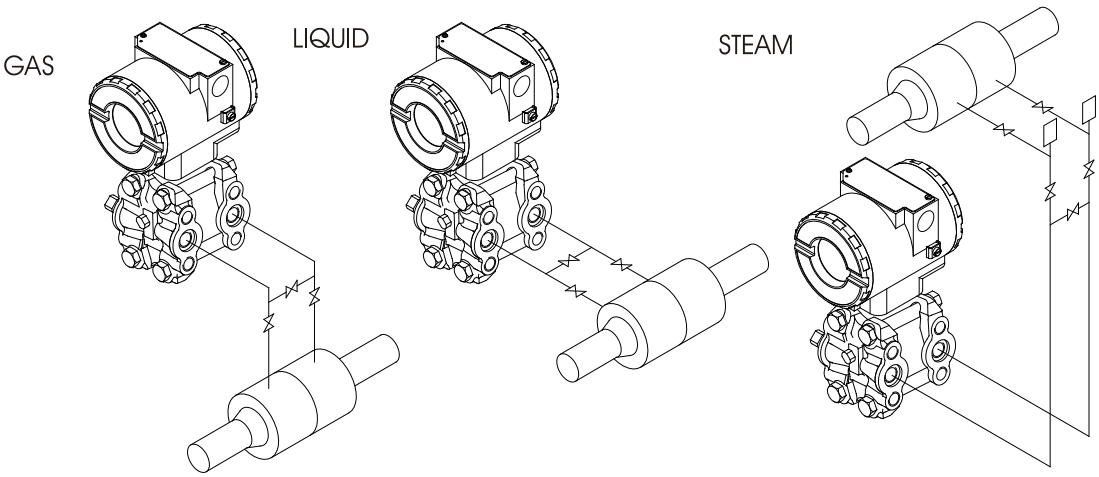

Figure 1.3 - Position of the Transmitter and Taps

NOTE
Except for dry gases, all impulse lines should slope at the ratio 1:10, in order to avoid trapping bubbles in the case of liquids, or condensation from steam or wet gases.

Housing Rotation

The housing can be rotated in order to get the digital display in better position. To rotate it, releases the Housing Rotation Set Screw. See Figure 1.4.

The digital display itself can also be rotated. In Section 4, See Figure 4.3.

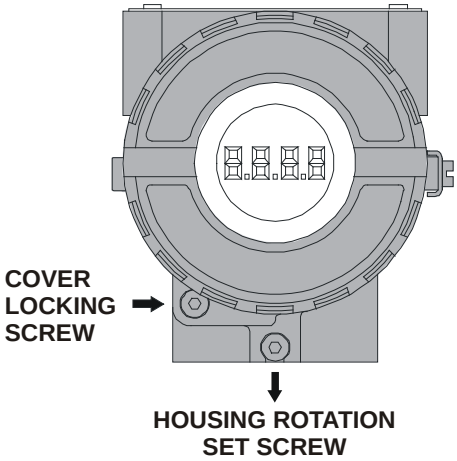

Figure 1.4 - Housing Rotation Set Screw

Reach the wiring block by removing the Electrical Connection Cover. This cover can be locked closed by the cover locking screw (Figure 1.5). To release the cover, rotate the locking screw clockwise.

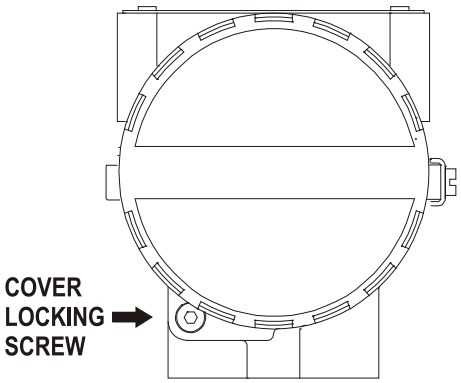

Figure 1.5 - Housing Rotation Set Screw

For convenience there are three ground terminals: one inside the cover and two externals, located close to the conduit entries. See figure 1.6.

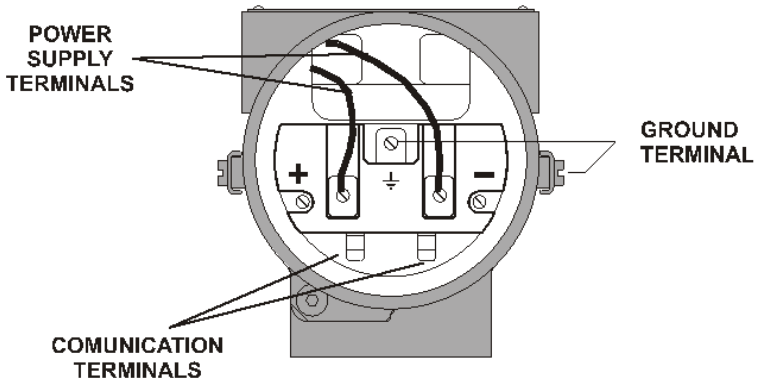

Figure 1.6 - Terminal Block

The **LD303** uses the 31.25 kbit/s voltage mode option for the physical signaling. All other devices on the same bus must use the same signaling. All devices are connected in parallel along the same pair of wires.

Various types of Profibus devices may be connected on the same bus.

The **LD303** is powered via the bus. The limit for such devices is according to the DP/PA coupler limitation for one bus for non-intrinsically safe requirement.

In hazardous area, the number of devices may be limited by intrinsically safe restrictions, according to the DP/PA coupler and barriers limitation.

The **LD303** is protected against reverse polarity, and can withstand ±35 VDC without damage, but it will not operate when in reverse polarity.

The Figure 1.7 shows the correct installation of the conduit, in order to avoid penetration of water, or other substance, which may cause malfunctioning of the equipment.

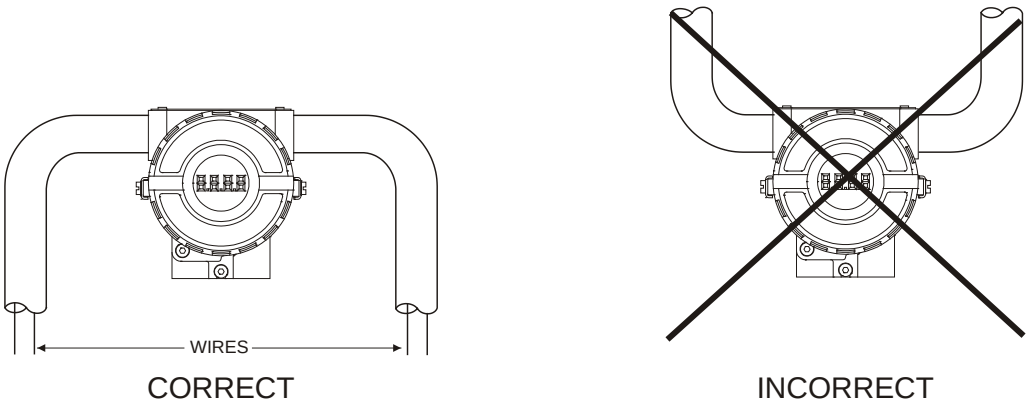

Figure 1.7 - Conduit Installation Diagram

NOTE
The transmitters are calibrated in the vertical position and a different mounting position displaces the zero point. Consequently, the indicator will indicate a different value from the applied pressure. In these conditions, it is recommended to do the zero pressure trim. The zero trim is to compensate the final assembly position and its performance, when the transmitter is in its final position. When the zero trim is executed, make sure the equalization valve is open and the wet leg levels are correct. For the absolute pressure transmitter, the assembly effects correction should be done using the Lower trim, due to the fact that the absolute zero, is the reference for these transmitters, so there is no need for a zero value for the Lower trim.

When the sensor is in the horizontal position, the weight of the fluid pushes the diaphragm down, making it necessary a Lower Pressure Trim see Figure 1.8.

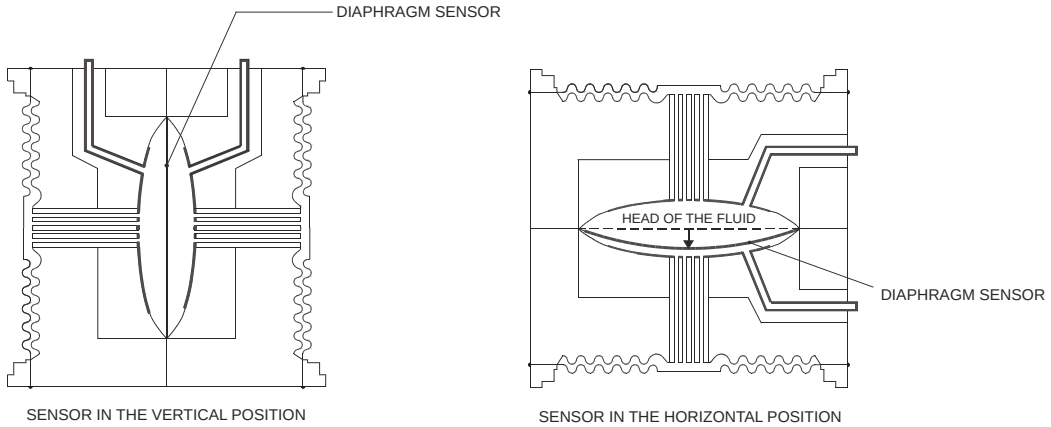

Figure 1.8 - Sensor Positions

NOTE
Please refer to the General Installation, Operation Manual and Maintenance Procedures Manual for more details.

NOTE
Please refer to the General Installation, Operation and Maintenance Procedures Manual for more details.

Bus Topology and Network Configuration

Wiring

Other types of cable may be used, other than for conformance testing. Cables with improved specifications may enable longer trunk length or superior interface immunity. Conversely, cables with inferior specifications may be used subject to length limitations for trunk and spurs plus possible nonconformance to the RFI/EMI susceptibility requirements. For intrinsically safe applications, the inductance/ resistance ratio (L/R) should be less than the limit specified by the local regulatory agency for the particular implementation.

Bus topology (See Figure 1.9) and tree topology (See Figure 1.10) are supported. Both types have a trunk cable with two terminations. The devices are connected to the trunk via spurs. The spurs may be integrated in the device giving zero spur length. A spur may connect more than one device, depending on the length. Active couplers may be used to extend spur length.

Active repeaters may be used to extend the trunk length.

The total cable length, including spurs, between any two devices in the Profibus should not exceed 1900 m.

The connection of couplers should be kept less than 15 per 250 m. In following figures the DP/PA link depends on the application needs.

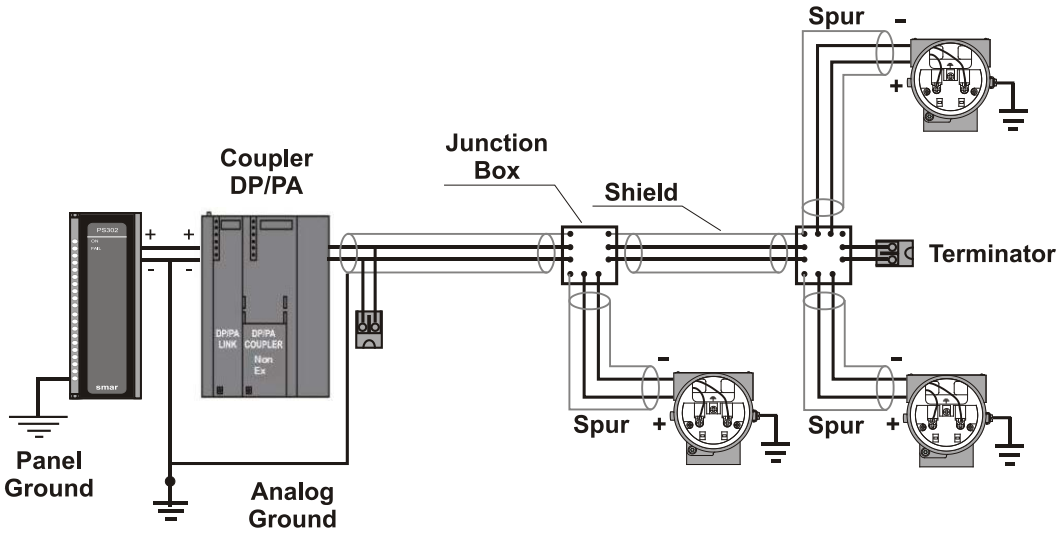

Figure 1.9 - Bus Topology

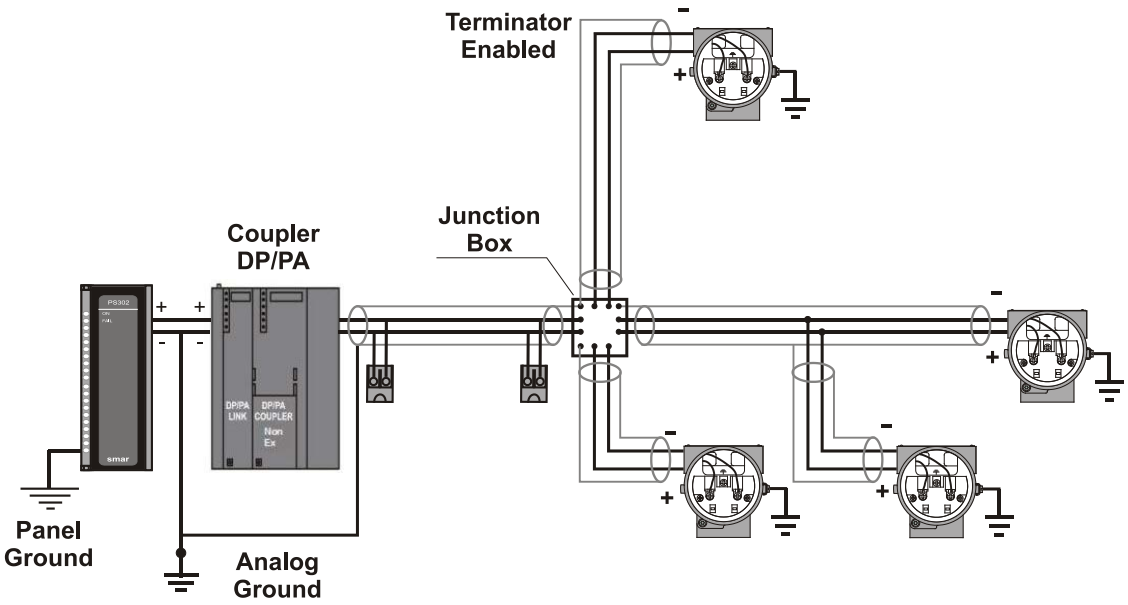

Figure 1.10 - Tree Topology

Intrinsic Safety Barrier

When the Profibus is in an area requiring intrinsic safety, a barrier must be inserted on the trunk between the power supply and the DP/PA coupler, when it is Non-Ex type.

Use of **DF47** is recommended. See more in **http://www.smar.com/products/df47-12.asp**.

Jumper Configuration

In order to work properly, the jumpers J1 and W1 located in the **LD303** main board must be correctly configured (See Table 1.2).

J1	This jumper enables the simulation mode parameter in the AI block.
W1	This jumper enables the local adjustment programming tree.

Table 1.2 - Description of the Jumpers

Power Supply

The **LD303** receives power from the bus via the signal wiring. The power supply may come from a separate unit or from another device such as a controller or DCS.

The voltage should be between 9 to 32 Vdc for non-intrinsic safe applications.

A special requirement applies to the power supply used in an intrinsically safe bus and depends on the type of barrier used.

Use of **PS302** is recommended as power supply.

Installation in Hazardous Areas

WARNING

Explosions could result in death or serious injury, besides financial damage. Installation of this transmitter in explosive areas must be carried out in accordance with the local standards and the protection type adopted .Before continuing the installation make sure the certificate parameters are I n accordance with the classified area where the equipment will be installed.

The instrument modification or parts replacement supplied by other than authorized representative of Smar is prohibited and will void the certification.

The transmitters are marked with options of the protection type. The certification is valid only when the protection type is indicated by the user. Once a particular type of protection is selected, any other type of protection can not be used.

The electronic housing and the sensor installed in hazardous areas must have a minimum of 6 fully engaged threads. Lock the housing using the locking screw (Figure 1.4).

The cover must be tighten with at least 8 turns to avoid the penetration of humidity or corrosive gases. The cover must be tighten until it touches the housing. Then, tighten more 1/3 turn (120°) to guarantee the sealing. Lock the covers using the locking screw (Figure 1.4).

Consult the Appendix A for further information about certification.

Explosion/Flame Proof

WARNING

Only use Explosion Proof/Flameproof certified Plugs, Adapters and Cable glands.

In Explosion-Proof installations the cable entries must be connected or closed using metal cable gland and metal blanking plug, both with at least IP66 and Ex-d certification.

The standard plugs provided by Smar are certified according to CEPEL certificate. If the plug needs to be replaced, a certified plug must be used.

The electrical connection with NPT thread must use waterproofing sealant. A non-hardening silicone sealant is recommended.

For NEMKO ATEX certificate please to follow the installation guidelines in hazardous locations below: Group II Category 2G, Ex d, Group IIC, Temperature Class T6, EPL Gb U = 28VDC
Ambient Temperature: -20 to 60ºC for T6
Environmental Protection: IP66/687 or IP66W/687W
The electrical connection available are ½ - 14NPT and M20x1,5.

Cable entries must be connected or closed using metal cable gland and metal blanking plug, both with at least IP66 and Ex-d certification or any appropriate ATEX approved metal cable gland and metal blanking plug. Do not remove the transmitter covers when power is ON.

Intrinsically Safe

WARNING

In hazardous zones with intrinsically safe or non-incendive requirements, the circuit entity parameters and applicable installation procedures must be observed.

To protect the application the transmitter **must be connected to a barrier**. Match the parameters between barrier and the equipment (Consider the cable parameters). Associated apparatus ground bus shall be insulated from panels and mounting enclosures. Shield is optional. If used, be sure to insulate the end not grounded. Cable capacitance and inductance plus C_i and L_i must be smaller than Co and Lo of the associated Apparatus.

It is not recommended to remove the transmitter cover when the power is ON.

OPERATION

The **LD303** Series Pressure Transmitters use capacitive sensors (capacitive cells) as pressure sensing elements, as shown in Figure 2.1. This is exactly the same sensor as the LD301 series uses, the sensor modules are therefore interchangeable.

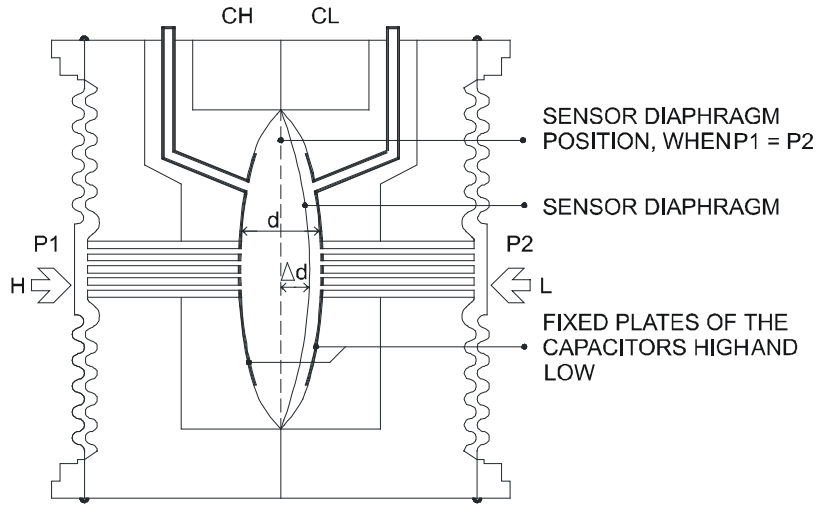

Figure 2.1 - Capacitive Cell

Functional Description - Sensor

Where,
P_1 and P_2 are the pressures and $P_1 \geq P_2$
CH = Capacitance between the fixed plate on P_1 side and the sensing diaphragm.
CL = Capacitance between the fixed plate on the P_2 side and the sensing diaphragm.
d = Distance between CH and CL fixed plates.
Δd = Sensing diaphragm's deflection due to the differential pressure $\Delta P = P_1 - P_2$.

Knowing that the capacitance of a capacitor with flat, parallel plates may be expressed as a function of plate area (A) and distance (d) between the plates:

$$C \approx \frac{\varepsilon \times A}{d}$$

Where,
ε = Dielectric constant of the medium between the capacitor's plates.

$$CH \approx \frac{\varepsilon \times A}{(d/2) + \Delta d} \text{ and } \frac{\varepsilon \times A}{(d/2) - \Delta d} \approx CL$$

However, should *CH* and *CL* be considered as capacitances of flat and parallel plates with identical areas, then:

However, should the differential pressure (ΔP) apply to the capacitive cell not deflect the sensing diaphragm beyond d/4, it is possible to assume ΔP as proportional to Δd, that is:

$$\Delta P \propto \Delta \mathrm{d}$$

By developing the expression (CL - CH)/(CL + CH), it follows that:

$$\frac{CL - CH}{CL + CH} = \frac{2\Delta d}{d}$$

As the distance (d) between the fixed plates CH and CL is constant. It is possible to conclude that the expression (CL - CH)/(CL + CH) is proportional to Δd and, therefore, to the differential pressure to be measured.

Thus it is possible to conclude that the capacitive cell is a pressure sensor formed by two capacitors whose capacitances vary according to the applied differential pressure.

Functional Description – Electronics

Refer to the block diagram Figure 2.2. The function of each block is described below.

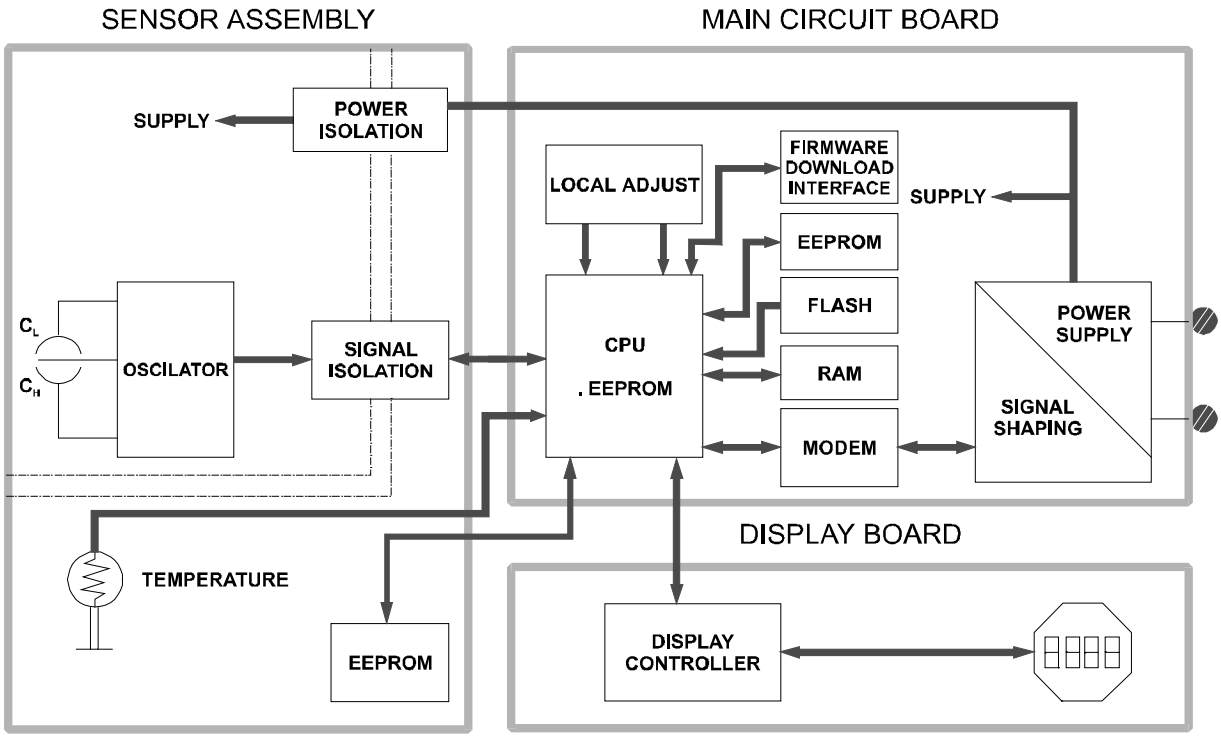

Figure 2.2 - LD303 Block Diagram Hardware

Oscillator
This oscillator generates a frequency as a function of sensor capacitance.

Signal Isolator
The control signals from the CPU and the signal from the oscillator are isolated to avoid ground loops.

Central Processing Unit (CPU), RAM, FLASH and EEPROM
The CPU is the intelligent portion of the transmitter, being responsible for the management and operation of measurement, block execution, self-diagnostics and communication. The program is stored in a FLASH memory for easy upgrade and saving data on power-down event occurrence. For temporary storage of data there is a RAM. The data in the RAM is lost if the power is switched off, however the main board has a nonvolatile EEPROM memory where the static data configured that must be retained is stored. Examples of such data are the following: calibration, links and identification data.

Sensor EEPROM
Another EEPROM is located within the sensor assembly. It contains data pertaining to the sensor's characteristics at different pressures and temperatures. This characterization is done for each sensor at the factory. It also contains the factory settings; they are useful in case of main board replacement, when its does an automatic upload of data from the sensor board to main board.

Profibus Modem
Monitors line activity, modulate and demodulate communication signals, inserts and deletes start and end delimiters, and checks integrity of frame received.

Power Supply
Takes power of the loop-line to power the transmitter circuitry.

Power Isolation
Isolates the signals to and from the input section, the power to the input section must be isolated.

Display Controller
Receives data from the CPU identifying which segments on the liquid crystal Display use to turn on. The controller drives the backplane and the segment control signals.

Local Adjustment
There are two switches that are magnetically activated. The magnetic tool without mechanical or electrical contact can activate them.

Display

The integral indicator is able to display one or two variables, which are user selectable. When two variables are chosen, the display will alternate between the two with an interval of 3 seconds.

The liquid crystal display includes a field with 4 ½ numeric digits, a field with 5 alphanumeric digits and an information field, as shown on Figure 2.3.

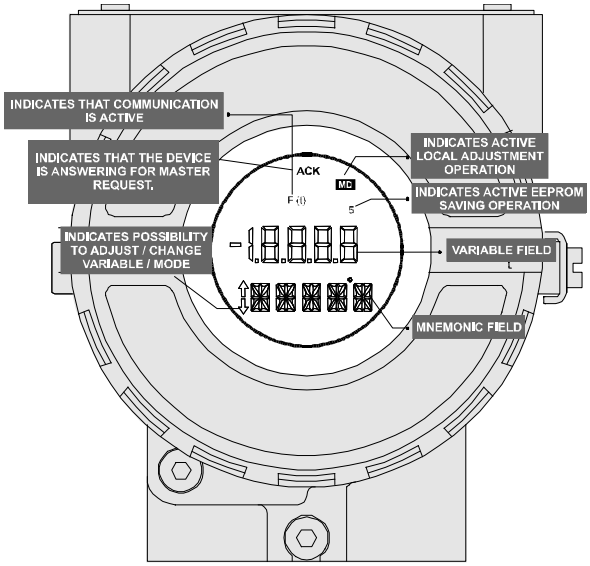

Figure 2.3 - LCD Indicator

CONFIGURATION

This section describes the characteristics of the blocks in the **LD303**. They follow the Profibus PA specifications, but in terms of transducer blocks, the input transducer block and display, they have some special features on top of this.

The 303 Smar family is integrated in Profibus View from Smar and Simatic PDM from Siemens. It is possible to integrate any 303 Smar devices into any configuration tool for Profibus PA devices. It is necessary to provide a Device Description or Drive according to the configuration tool. In this manual is taken several examples using Profibus View or Simatic PDM.

In order to assure correct values in the offline configuration, first run “Download to PG/PC” option to assure valid values. After, run the Menu Device option to configure the required parameters using the related menus.

NOTE
In offline configuration, it is not advisable to use the “Download to Device” option. This function can misconfigure the equipment.

Transducer Block

Transducer block insulates function block from the specific I/O hardware, such as sensors, actuators. Transducer block controls access to I/O through manufacturer specific implementation. This permits the transducer block to execute as frequently as necessary to obtain good data from sensors without burdening the function blocks that use the data. It also insulates the function block from the manufacturer specific characteristics of certain hardware.

By accessing the hardware, the transducer block can get data from I/O or passing control data to it. The connection between Transducer block and Function block is called channel. These blocks can exchange data from its interface.

Normally, transducer blocks perform functions, such as linearization, characterization, temperature compensation, control and exchange data to hardware.

Transducer Block Diagram

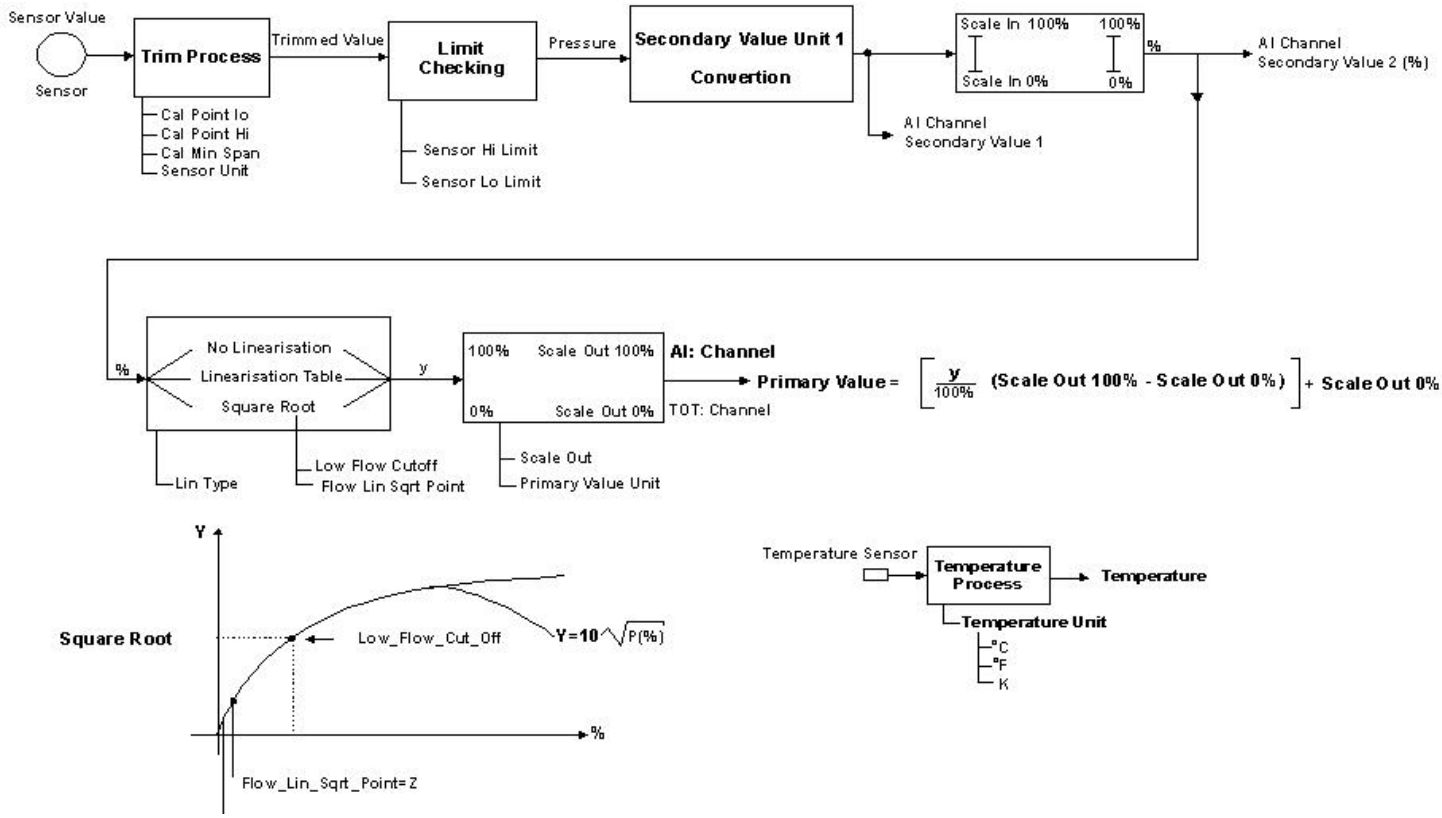

Figure 3.1 – Transducer Block Diagram

Pressure Transducer Block Parameter Description

Parameter	Description
BACKUP_RESTORE	This parameter allows to save and to restore data according to factory and user calibration procedures. It has the following options: 1, "Factory Cal Restore", 2, "Last Cal Restore", 3, "Default Data Restore", 4, "Shut-Down Data Restore", 5, "Sensor Data Restore", 11, "Factory Cal Backup", 12, "Last Cal Backup", 14, "Shut-Down Data Backup", 15, "Sensor Data Backup", 0, "None".
CAL_MIN_SPAN	This parameter contains the minimum calibration span value allowed. This minimum span information is necessary to ensure that when calibration is done, the two calibrated points (high and low) are not too close together. Unit derives from SENSOR_UNIT.
CAL_POINT_HI	This parameter contains the highest calibrated value. For calibration of the high limit point you give the high measurement value (pressure) to the sensor and transfer this point as HIGH to the transmitter. Unit derives from SENSOR_UNIT.
CAL_POINT_LO	This parameter contains the lowest calibrated value. For calibration of the low limit point you give the low measurement value (pressure) to the sensor and transfer this point as LOW to the transmitter. Unit derives from SENSOR_UNIT.
CAL_TEMPERATURE	This parameter contains the calibrated temperature value. Unit derives from TEMPERATURE_UNIT.
COEFF_POL	This parameter contains the polynomial coefficients.

Parameter	Description
DEAD BAND_BYPASS	This parameter is used to enable the zero cutoff. { 1, "True" } { 0, "False" }
EEPROM_FLAG	This parameter is used to indicate EEPROM saving process. { 0, "False" } { 1, "True" }
FACTORY_CURVE_BYPASS	This parameter is used to enable factory characterization curve. { 85, "Disable" } { 170, "Enable and Backup Cal" } { 4010, "Disable and Restore Cal" } { 61440, "Disable or Allows to enter the points" }
FACTORY_CURVE_X	This parameter contains input points of factory characterization curve.
FACTORY_CURVE_Y	This parameter contains input points of factory characterization curve.
FACTORY_CURVE_LENGTH	This parameter contains the number of points of factory characterization curve
FLOW_LIN_SQRT_POINT	This is the point of the flow function where the curve changes from linear to square root function. The input has to be done in percent of flow.
LIN_TYPE	Linearization – Type: 0 – No Linearization 1 – User Defined Table 10 – Square Root
LOW_FLOW_CUT_OFF	This is the point in percent of flow till that the output of the flow function is set to zero. It is used for suppressing low flow values.
MAIN_BOARD_SN	This is the main board serial number.
MAX_SENSOR_VALUE	Holds the maximum process SENSOR_VALUE. A write access to this parameter resets to the momentous value. The unit is defined in SENSOR_UNIT.
MIN_SENSOR_VALUE	Holds the minimum process SENSOR_VALUE. A write access to this parameter resets to the momentous value. The unit is defined in SENSOR_UNIT.
MAX_TEMPERATURE	Holds the maximum temperature. A write access to this parameter resets to the momentous value.
MIN_TEMPERATURE	Holds the minimum temperature. A write access to this parameter resets to the momentous value.
ORDERING_CODE	Indicates information about the sensor and control from production factory.
POLYNOMIAL_VERSION	Indicates the polynomial version.
PRESS_LIN_NORMAL	Indicates the Linear Normalized Pressure.
PRESS_NORMAL	Indicates Normalized Pressure.
PRIMARY_VALUE	This parameter contains the measured value and status available to the Function Block. The unit of PRIMARY_VALUE is the PRIMARY_VALUE_UNIT.
PRIMARY_VALUE_TYPE	This parameter contains the application of the pressure device. 0: Pressure 1: Flow 2: Level 3: Volume 4-127: reserved > 128: manufacture specific
PRIMARY_VALUE_UNIT	This parameter contains the engineering units index code for the primary value. See explanation about Primary_Value_Unit.
PROCESS_CONNECTION_MATERIAL	Not used.
PROCESS_CONNECTION_TYPE	Not used.
SCALE_IN	This is the input conversion of the Pressure into SECONDARY_VALUE_2 using the high and low scale. The related unit is the SECONDARY_VALUE_1_UNIT.
SCALE_OUT	This is the output conversion of the linearized value using the high and low scale. The related unit is the PRIMARY_VALUE_UNIT.
SECONDARY_VALUE_1	This parameter contains the Pressure value and status available to the Function Block.
SECONDARY_VALUE_1_UNIT	This parameter contains the pressure units of the SECONDARY_VALUE_1.
SECONDARY_VALUE_2	This parameter contains the measured value after input scaling and status available to the Function Block. The related unit is the SECONDARY_VALUE_UNIT_2.

Parameter	Description
SECONDARY_VALUE_2_UNIT	This parameter contains the units of the SECONDARY_VALUE_2 defined by the manufacturer
SENSOR_DIAPHRAGM_MATERIAL	This parameter contains the index code for the material of the diaphragm, which comes in contact with the process media.
SENSOR_FILL_FLUID	This parameter contains the index code for the fill fluid inside the sensor. The index code is manufacture specific.
SENSOR_MAX_STATIC_PRESSURE	Not used.
SENSOR_O_RING_MATERIAL	Not used.
SENSOR_HI_LIM	This parameter contains the sensor upper limit value. Unit derives from SENSOR_UNIT.
SENSOR_LO_LIM	This parameter contains the sensor lower limit value. Unit derives from SENSOR_UNIT.
SENSOR_RANGE_CODE	Indicates the sensor range code. { 0, "Range 1 (20 inH2O)" }, { 1, "Range 2 (200 inH2O)" }, { 2, "Range 3 (1000 inH2O)" }, { 3, "Range 4 (360 psi)" }, { 4, "Range 5 (3600 psi)" }, { 5, "Range 6 (5800 psi)" }, { 253, "Special" }
SENSOR_SERIAL_NUMBER	This parameter contains the sensor serial number.
SENSOR_TYPE	This parameter contains the index code for the sensor type described in the manufacturer's specific table. {117, "Capacitance"}
SENSOR_UNIT	This parameter contains the engineering units index code for the calibration values. See Table 3.4.
SENSOR_VALUE	This parameter contains the raw sensor value. The uncalibrated measurement value from the sensor. Unit derives from SENSOR_UNIT.
TAB_ACTUAL_NUMBER	Contains the actual numbers of entries in the table. It shall be calculated after the transmission of the table is finished.
TAB_INDEX	The index parameter identifies which element of the table is in the X_VALUE and Y_VALUE parameter currently
TAB_MAX_NUMBER	TAB_MAX_NUMBER is the maximum size (number of X_VALUE and Y_VALUE values) of the table in the device.
TAB_OP_CODE	The modification of a table in a device influences the measurement or actuation algorithms of the device. Therefore an indication of a starting and an end point is necessary. The TAP_OP_CODE controls the transaction of the table. 0: not initialized 1: new operation characteristic, first value (TAB_ENTRY=1), old curve cleared 2: reserved 3: last value, end of transmission, check table, swaps the old curve with the new curve, actualize ACTUAL_NUMBER. 4: delete point of table with actual index (optional), sort records with increasing Charact-Input-Value, assign new indexes, and decrement CHARACT_NUMBER. 5: insert point (Charact-Input-Value relevant) (optional), sort records with increasing Charact-Input-Value, assign new indexes. Increment CHARACT_NUMBER. 6: replace point of table with actual index (optional).
TAB_STATUS	It is common to provide a plausibility check in the device. The result of this check is indicated in the TAB_STATUS parameter. 0: not initialized 1: good (new table is valid) 2: not monotonous increasing (old table is valid) 3: not monotonous decreasing (old table is valid) 4: not enough values transmitted (old table is valid) 5: too many values transmitted (old table is valid) 6: gradient of edge too high (old table is valid) 7: Values not excepted (old values are valid) 8 - 127 reserved > 128 manufacturer specific
TAB_X_Y_VALUE	The X_Y_VALUE parameter contains one value couple of the table.

Parameter	Description
TEMPERATURE	This parameter contains the temperature (e.g. sensor temperature used for measurement compensation) with the associated status used within the transducer. The unit of TEMPERATURE is the TEMPERATURE_UNIT.
TEMPERATURE_UNIT	This parameter contains the units of the temperature. The unit codes are: K (1000), °C (1001), and °F (1002).
TRD_TRANSDUCER_TYPE	Indicates the type of pressure transmitter: 107, differential; 108, gauge; 109, absolute; 65535, others/special.
TRIMMED_VALUE	This parameter contains the sensor value after the trim processing. Unit derives from SENSOR_UNIT.
XD_ERROR	Indicates the condition of calibration process according to: {16, "Default value set"}, {22, "Applied process out of range"}, {26, "Invalid configuration for request"}, {27, "Excess correction"}, {28, "Calibration failed"}

Table 3.1 - Pressure Transducer Block Parameter Description

Pressure Transducer Block Parameter Attributes

Rel. Index	Parameter	Object Type	Data Type	Storage	Size	Access	Parameter usage/ Type of transport	Default – value	Down-load Order	Mandatory / Optional (Class)	View
... Standard Parameter											
Additional Parameter for Transducer Block											
8	SENSOR_VALUE	Simple	Float	D	4	r	C/a	0	-	M (B)	
9	SENSOR_HI_LIM	Simple	Float	N	4	r	C/a	0	-	M (B)	
10	SENSOR_LO_LIM	Simple	Float	N	4	r	C/a	0	-	M (B)	
11	CAL_POINT_HI	Simple	Float	N	4	r,w	C/a	5080.0	-	M (B)	
12	CAL_POINT_LO	Simple	Float	N	4	r,w	C/a	0.0	-	M (B)	
13	CAL_MIN_SPAN	Simple	Float	N	4	r	C/a	0	-	M (B)	
14	SENSOR_UNIT	Simple	Unsigned 16	N	2	r,w	C/a	1151	2	M (B)	
15	TRIMMED_VALUE	Record	DS-33	D	5	r	C/a	0.0	-	M (B)	
16	SENSOR_TYPE	Simple	Unsigned 16	N	2	r	C/a	117	-	M (B)	
17	SENSOR_SERIAL_NUMBER	Simple	Unsigned 32	N	4	r,w	C/a	0	-	M (B)	
18	PRIMARY_VALUE	Record	DS-33	D	5	r	C/a	0.0	-	M (B)	1
19	PRIMARY_VALUE_UNIT	Simple	Unsigned 16	N	2	r,w	C/a	1151	3	M (B)	
20	PRIMARY_VALUE_TYPE	Simple	Unsigned 16	N	2	r,w	C/a	100	-	M (B)	
21	SENSOR_DIAPHRAGM_ MATERIAL	Simple	Unsigned 16	S	2	r,w	C/a	2	-	O (B)	
22	SENSOR_FILL_FLUID	Simple	Unsigned 16	S	2	r,w	C/a	2	-	O (B)	
23	SENSOR_MAX_STATIC_PRESSURE	Not used.									
24	SENSOR_O_RING_MATERIAL	Not used.									
25	PROCESS_CONNECTION_TYPE	Not used.									
26	PROCESS_CONNECTION_MATERIAL	Not used.									
27	TEMPERATURE	Record	DS-33	D	5	r	C/a	0.0	-	O (B)	
28	TEMPERATURE_UNIT	Simple	Unsigned 16	N	2	r,w	C/a	1001	4	O (B)	
29	SECONDARY_VALUE_1	Record	DS-33	D	5	r	C/a	0.0	-	O (B)	
30	SECONDARY_VALUE_1_UNIT	Simple	Unsigned 16	N	2	r,w	C/a	1151	5	O (B)	
31	SECONDARY_VALUE_2	Record	DS-33	D	5	r	C/a	0	-	O (B)	
32	SECONDARY_VALUE_2_UNIT	Simple	Unsigned 16	N	2	r,w	C/a	1151	6	O (B)	
33	LIN_TYPE	See explanation about table handling							1	M (B)	
34	SCALE_IN	Array	Float	S	8	r,w	C/a	5080.0	7	O(B)	
35	SCALE_OUT	Array	Float	S	8	r,w	C/a	0.0	8	O (B)	
36	LOW_FLOW_CUT_OFF	Simple	Float	S	4	r,w	C/a	0.0	-	O (B)	
37	FLOW_LIN_SQRT_POINT	Simple	Float	S	4	r,w	C/a	0.0	-	O (B)	
38	TAB_ACTUAL_NUMBER	See explanation about table handling									
39	TAB_INDEX	See explanation about table handling									
40	TAB_MAX_NUMBER	See explanation about table handling									

Rel. Index	Parameter	Object Type	Data Type	Storage	Size	Access	Parameter usage/ Type of transport	Default – value	Down-load Order	Mandatory / Optional (Class)	View
41	TAB_MIN_NUMBER	See explanation about table handling									
42	TAB_OP_CODE	See explanation about table handling									
43	TAB_STATUS	See explanation about table handling									
44	TAB_X_Y_VALUE	See explanation about table handling									
45	MAX_SENSOR_VALUE	Simple	Float	N	4	r,w	C/a	0.0	-	O (B)	
46	MIN_SENSOR_VALUE	Simple	Float	N	4	r,w	C/a	0.0	-	O (B)	
47	MAX_TEMPERATURE	Simple	Float	N	4	r,w	C/a	0.0	-	O (B)	
48	MIN_TEMPERATURE	Simple	Float	N	4	r,w	C/a	0.0	-	O (B)	
49	RESERVED BY PNO										
50	RESERVED BY PNO										
51	RESERVED BY PNO										
52	RESERVED BY PNO										
53	RESERVED BY PNO										
54	RESERVED BY PNO										
55	RESERVED BY PNO										
56	RESERVED BY PNO										
57	RESERVED BY PNO										
58	RESERVED BY PNO										
59	RESERVED BY PNO										
60	CAL_TEMPERATURE	Simple	Float	N	4	r,w	C/a	25.0	-	O (B)	
61	BACKUP_RESTORE	Simple	Unsigned 8	S	1	r,w	C/a	0	-	O (B)	
62	FACTORY_CURVE_BYPASS	Simple	Unsigned 16	S	2	r,w	C/a	0x0F	-	O (B)	
63	FACTORY_CURVE_X	Array	Float	S	20	r,w	C/a	-	-	O (B)	
64	FACTORY_CURVE_Y	Array	Float	S	20	r,w	C/a	-	-	O (B)	
65	FACTORY_CURVE_LENGTH	Simple	Unsigned 8	S	1	r,w	C/a	5	-	O (B)	
66	PRESS_LIN_NORMAL	Record	DS-33	D	5	r	C/a	0.0	-	O (B)	
67	PRESS_NORMAL	Record	DS-33	D	5	r	C/a	0.0	-	O (B)	
68	DEAD BAND_BYPASS	Simple	Unsigned 8	S	1	r,w	C/a	TRUE	-	O (B)	
69	COEFF_POL	Array	Float	S	48	r,w	C/a	-	-	O (B)	
70	POLYNOMIAL_VERSION	Simple	Unsigned 8	S	1	r,w	C/a	0x32	-	O (B)	
71	SENSOR_RANGE_CODE	Simple	Unsigned 8	S	1	r,w	C/a	1	-	O (B)	
72	TRD_TRANSDUCER_TYPE	Simple	Unsigned 16	S	2	r,w	C/a	107	-	O (B)	
73	XD_ERROR	Simple	Unsigned 8	D	1	r	C/a	0x10	-	O (B)	
74	MAIN_BOARD_SN	Simple	Unsigned 32	S	4	r,w	C/a	0	-	O (B)	
75	EEPROM_FLAG	Simple	Unsigned 8	D	1	r	C/a	FALSE	-	O (B)	
76	ORDERING_CODE	Array	Unsigned 8	S	50	r,w	C/a	-	-	O (B)	

Table 3.2 Pressure Transducer Blocks Parameter Attributes

LD303 - Cyclic Configuration

The PROFIBUS-DP and PROFIBUS-PA protocols have mechanisms against communication failures between the slave device and the network master. For example, during initialization, these mechanisms are used to check these possible errors. After powering up the field device (slave), it can cyclically exchange information with the class 1 master, if the parameterization for the slave is correct. This information is obtained using the GSD files (supplied by the device manufacturer, it contains their descriptions). Through the commands below, the master executes all initialization process with the PROFIBUS-PA device:

- Get_Cfg: uploads the slave configuration on the master and checks network configuration;
- Set_Prm: writes to the slave parameters and executes the parameterization network;
- Set_Cfg: configures the slaves according to its outputs and inputs;
- Get_Cfg: another command, where the master checks the slave configuration.

All these services are based on the information obtained from slave GSD files. The GSD file from **LD303** shows details such as, hardware and software revision, device bus timing and information about cyclic data exchange.

LD303 has two function blocks: one AI (Analog Input) and one TOT (Totalizer). It also has the empty module for applications where not all function blocks are necessary. The following cyclic order of the blocks should be respected: AI and TOT. Suppose, only the AI block is necessary, then configure this way: AI, EMPTY_MODULE.

Most PROFIBUS configuration tools use two directories where the different manufacturers' GSD's and BITMAPS files are stored. The GSD's and BITMAPS for Smar devices can be obtained through the website: (https://www.smar.com), on the 'download' link.

The following example shows the necessary steps to integrate the **LD303** on a Profibus system.

These steps are valid for the entire 303 line of Smar devices:

- Copy the **LD303** gsd file to the research directory of the PROFIBUS configuration tool, usually called GSD;
- Copy the **LD303** bitmap file to the research directory of the PROFIBUS configuration tool usually called BMP;
- After choosing the master, define the baud rate for the network. Do not forget that couplers may work with the following baud rate: 45.45 kbits/s (Siemens model), 93.75 kbits/s (P+F model) and 12 Mbits/s (P+F, SK2 model). The IM157 device link (Siemens model) may work up to 12 Mbits/s;
- Add the **LD303** and specify its physical bus address;
- Choose the cyclic configuration via parameterization using the gsd file that depends on the application, as detailed previously. For every AI (Analog Input) block, the **LD303** provides the process variable to the master in 5 bytes value, being the first four according to float point data type and the fifth byte is the status that brings the measure quality of this information.

In the TOT (Totalizer) block, the user can choose the totalization value (Total) and the integration is made considering the operation mode (Mode_Tot). It allows defining of how the totalization will be, with the following options: only positive value of the flow, only negative values of the flow, or both. In this block, the user can reset the totalization and configure the preset value through the Set_Tot parameter. The reset option is very used in batch processes;

It allows activating the condition of watchdog, which the device goes to a fail safe condition, when a loss of communication is detected with the master.

How to Configure the Transducer Block

The transducer block has an algorithm, a set of contained parameters and a channel connecting it to a function block.

The algorithm describes the behavior of the transducer as a data transfer function between the I/O hardware and other function block. The set of contained parameters, it means, you are not able to link them to other blocks and publish the link via communication, defines the user interface to the transducer block. They can be divided into Standard and Manufacturer Specific.

The standard parameters will be present for such class of device, as pressure, temperature, actuator, etc., whatever is the manufacturer. Oppositely, the manufacturers specific ones are defined only for its manufacturer. As common manufacturer specific parameters, we have calibration settings, material information, linearization curve, etc.

When you perform a standard routine as a calibration, you are conducted step by step by a method. The method is generally defined as guide line to help the user to make common tasks. The configuration tool identifies each method associated to the parameters and enables the interface to it.

The Profibus View from Smar and Simatic PDM (Process Device Manager), from configuration softwares, for example, can configure many parameters of the Input Transducer block. See figure 3.2 and 3.3.

Figure 3.2 - Function and Transducers Blocks – Profibus View

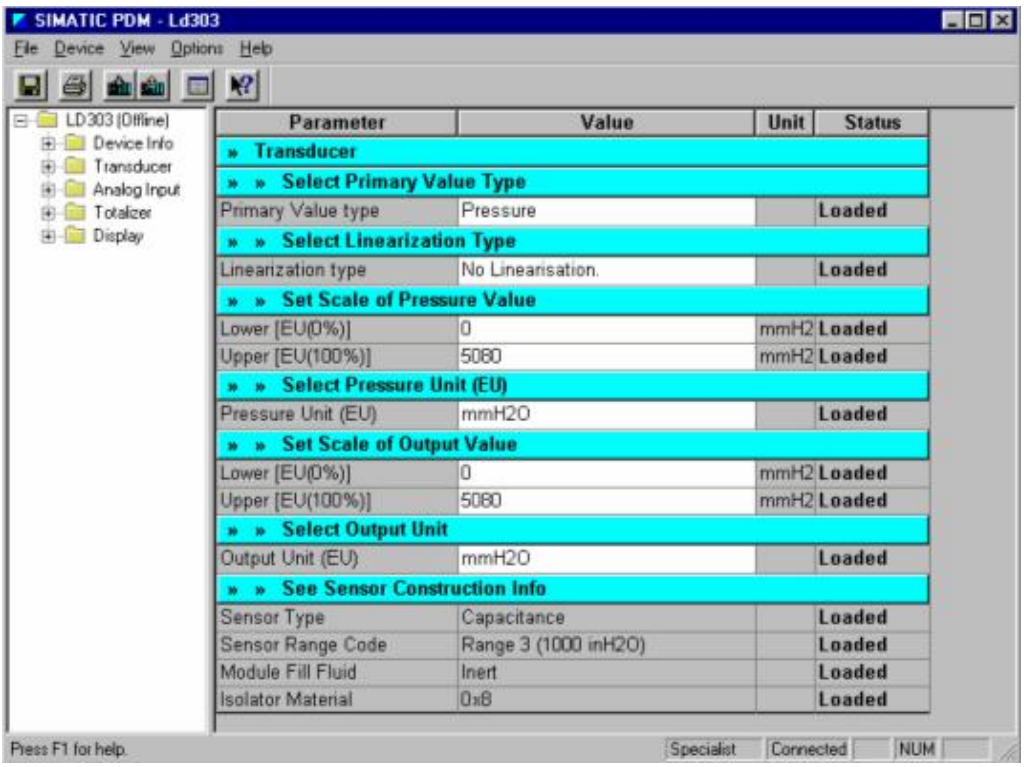

Figure 3.3 - Function and Transducers Blocks – Simatic PDM

To make the configuration of Transducer Block, we need to select the menu "Device".

Use this menu:

- To change the device address;
- To make the up/download of parameters;
- To configure the Transducer Blocks, Analog Blocks and Display Block;
- To calibrate the transmitter;
- To make the reset by software, to protect the device against writing and to simulate the value from transducer block to analog block;
- To save and restore data calibration.

Depending on the application, select "Pressure"or "Flow".

The user can select the linearization according to his application.

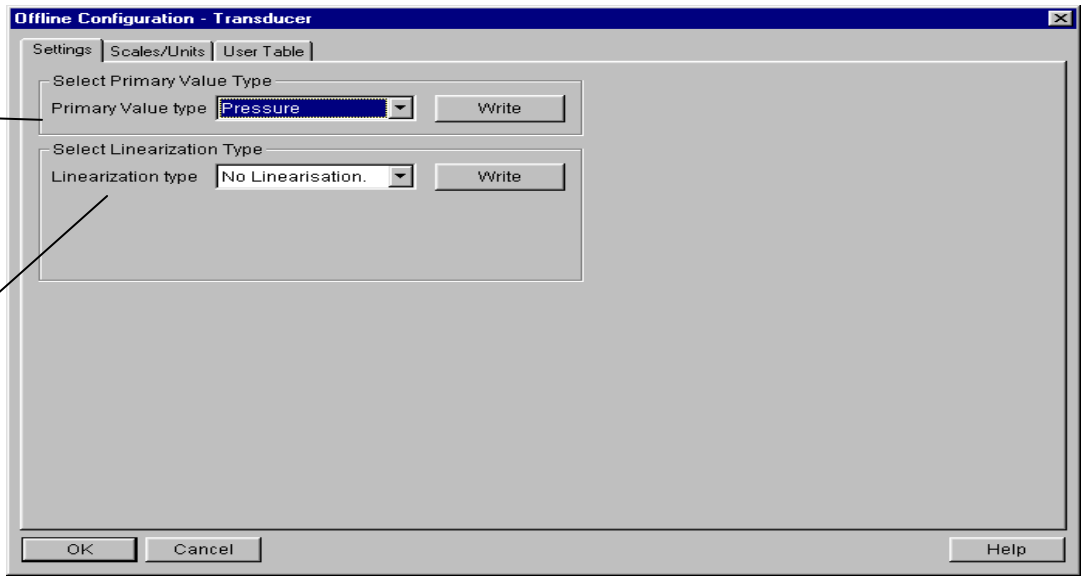

Figure 3.4 – Office Configuration – Transducer

Using this window, the user can set the Primary Value Type according to his application, selecting "Pressure" or “Flow".

Also, the user can select the Linearization Type, choosing "No Linearization", "Square Root" or "User Defined (Table)”.

When the user desires to make the square root of pressure is necessary to set Primary Value Type to "Flow".

Using the next window the user can configure the units according to the Transducer Block Diagram:

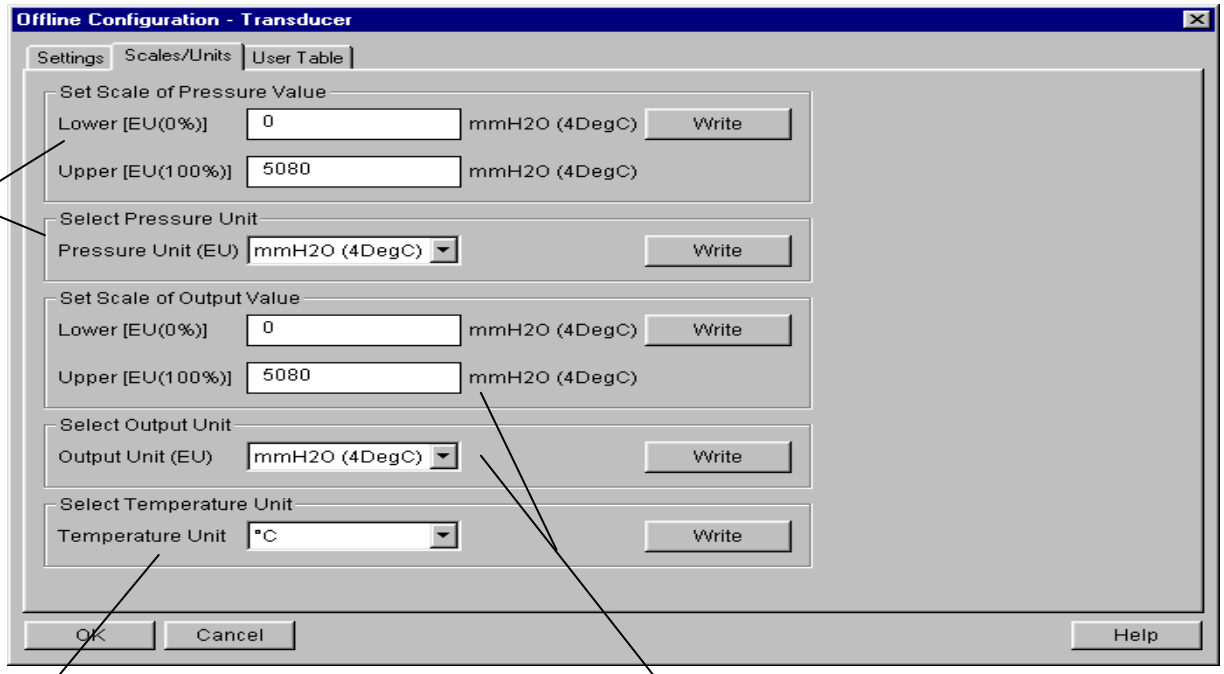

The User can select the unit and scaling for pressure.

The User can select the temperature unit.

The User can select the output unit and output scaling according to his application.

Figure 3.5 – Scale Units for Transducer Block

Table handling

There is the possibility to load and re-load tables in the devices. This table is used for linearization mostly. For this procedure the following parameters are necessary:

TAB_INDEX
TAB_X_Y_VALUE
TAB_MIN_NUMBER
TAB_MAX_NUMBER
TAB_OP_CODE
TAB_STATUS

The TAB_X_Y_VALUE parameter contains the value couple of the each table entries.

The TAB_INDEX parameter identifies which element of the table is in the TAB_X_Y_VALUE parameter currently (see the following figure).

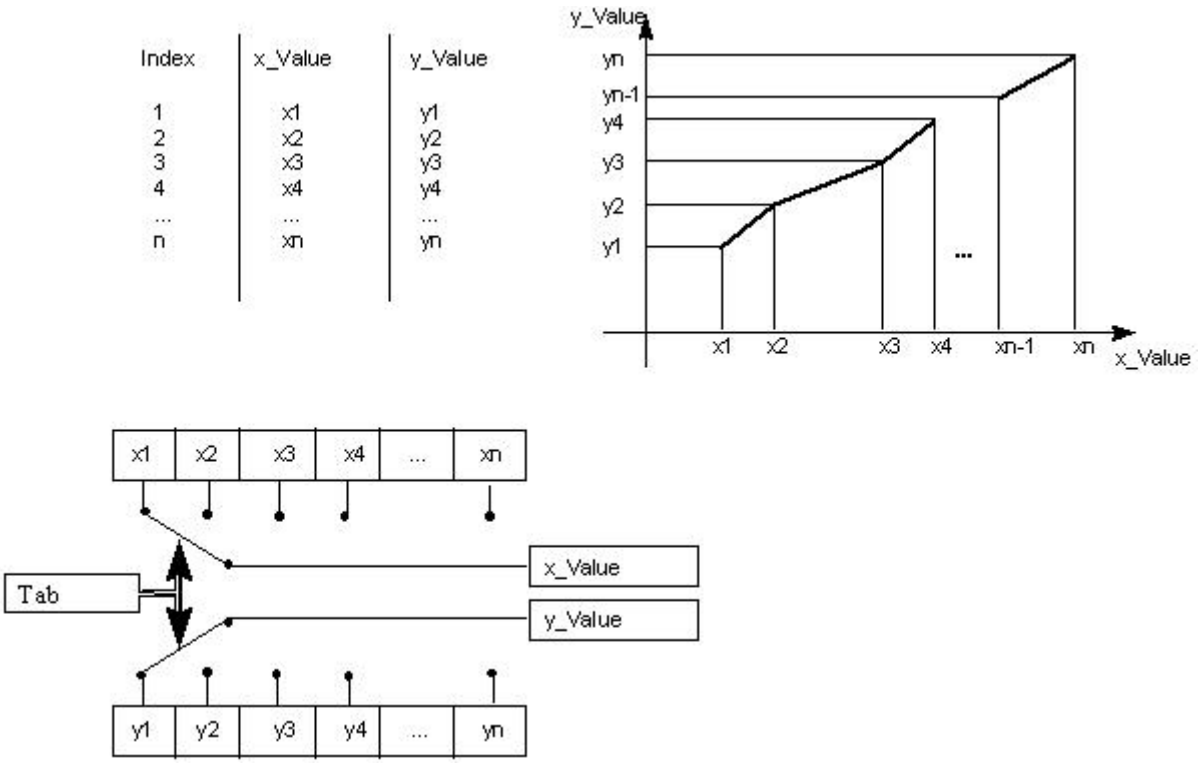

Figure 3.6 – Parameters of a Table

TAB_MAX_NUMBER is the maximum size of the table in the device. TAB_MIN_NUMBER is the minimum size of the table in the device.
The modification of a table in the device influences the measurement algorithms of the device. Therefore an indication of a starting and an endpoint is necessary. The TAB_OP_CODE controls the transaction of the table. The device provides a plausibility check. The result of this check is indicated in the TAB_STATUS parameter.

The User Table is used to make the pressure characterization in several points.

The user can configure up to 21 points in percentage unit.

The sensor characteristic curve at a certain temperature and for certain ranges may be slightly nonlinear.

This eventual non-linearity may be corrected through the User Table.

The user just needs to configure the input values and the correspondent output values in %.

Configure a minimum of two points. These points will define the characterization curve. The maximum number of points is 21. It is recommended to select the points equally distributed over the desired range or over a part of the range where more accuracy is required.

Go to "Device Off Line Configuration Transducer" window and select "user defined (table)".

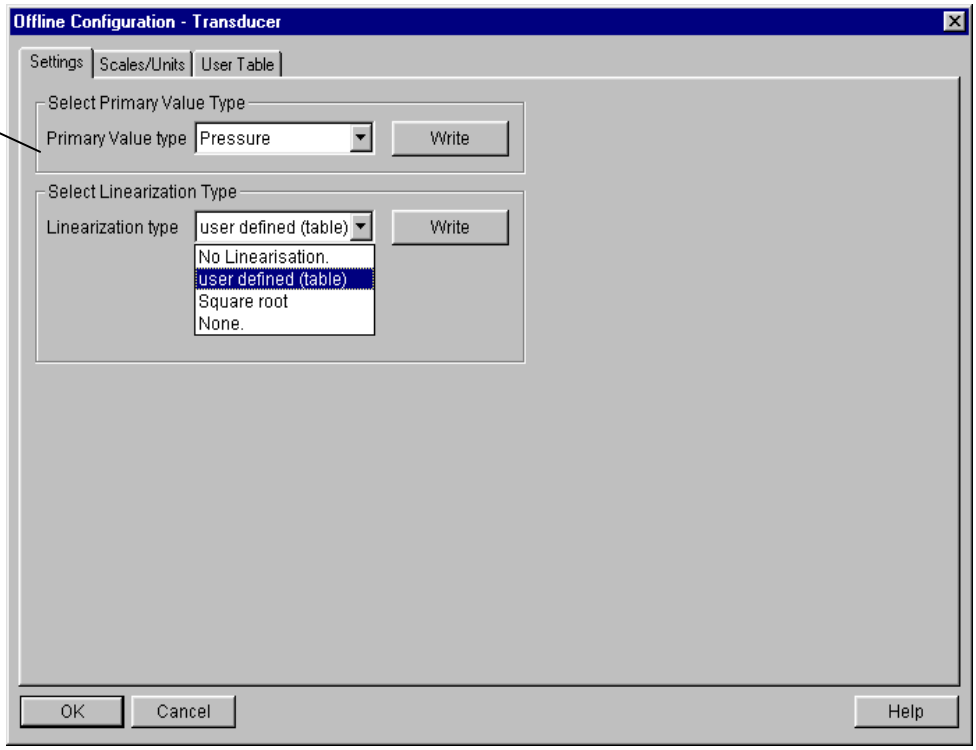

Figure 3.7 – Transducer Offline Configuration Screen

Using the menu Table, the user can configure the points.

The user also can read the configurable table and write a new one. In this case, the table must be monotonous increasing; otherwise, the points will not be configurable. Please see the following figure:

Enter the input and output values.

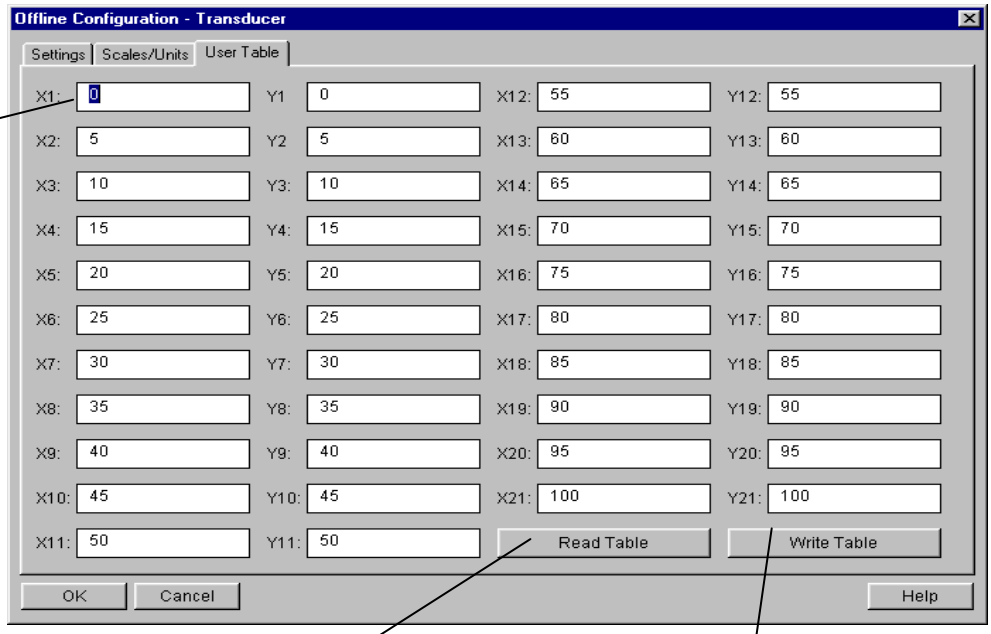

Allows the reading of configurable table.

After configuring the points, this key must be press to verify if the table is monotonous increasing.

Figure 3.8 –Transducer Off Line Configuration – User Table Screen

See the Transducer Block configuration screens below using the Profibus View.

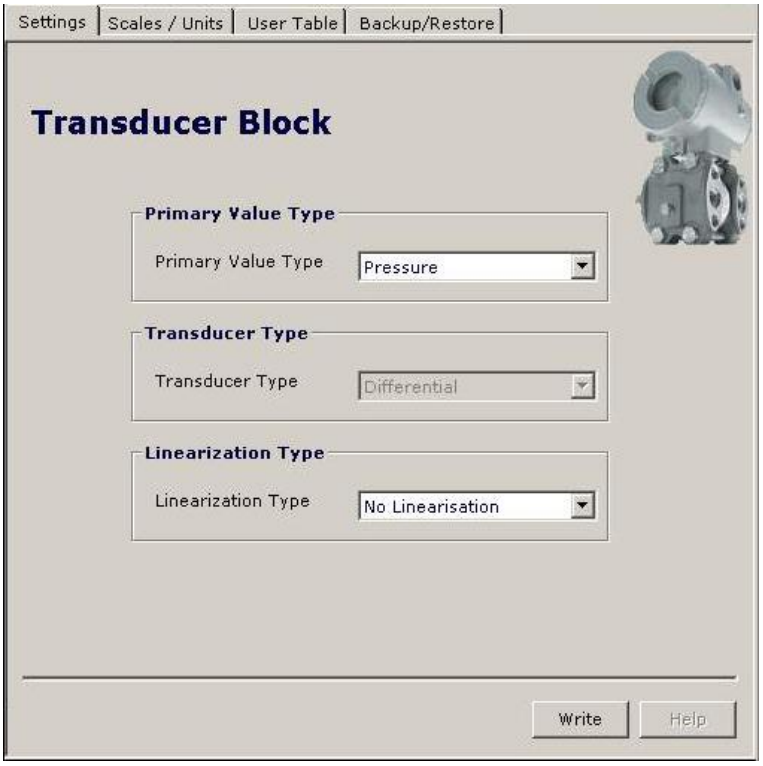

Figure 3.9 - Scale Units for Transducer Block

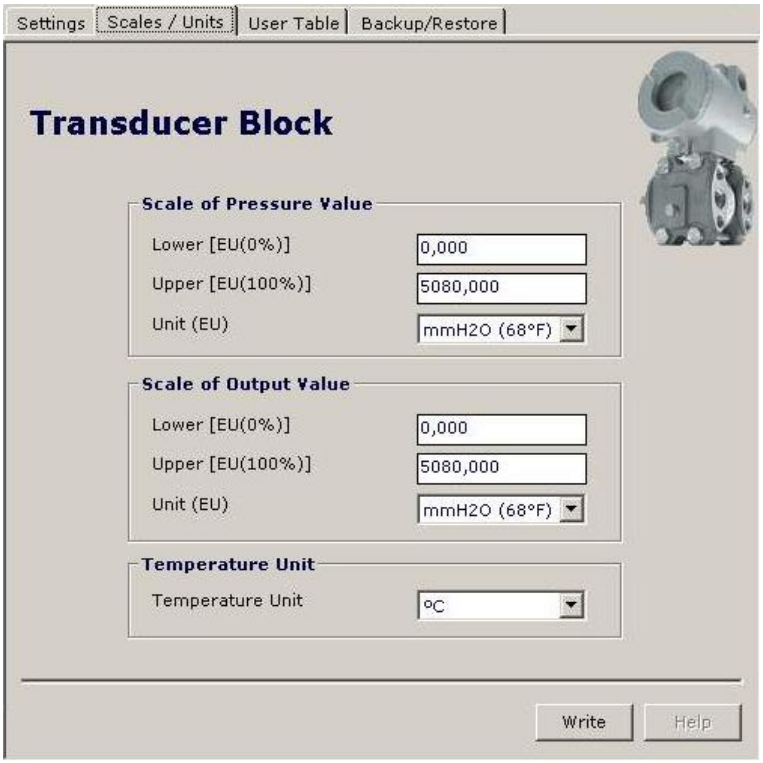

Figure 3.10 - Transducer Configuration Screen

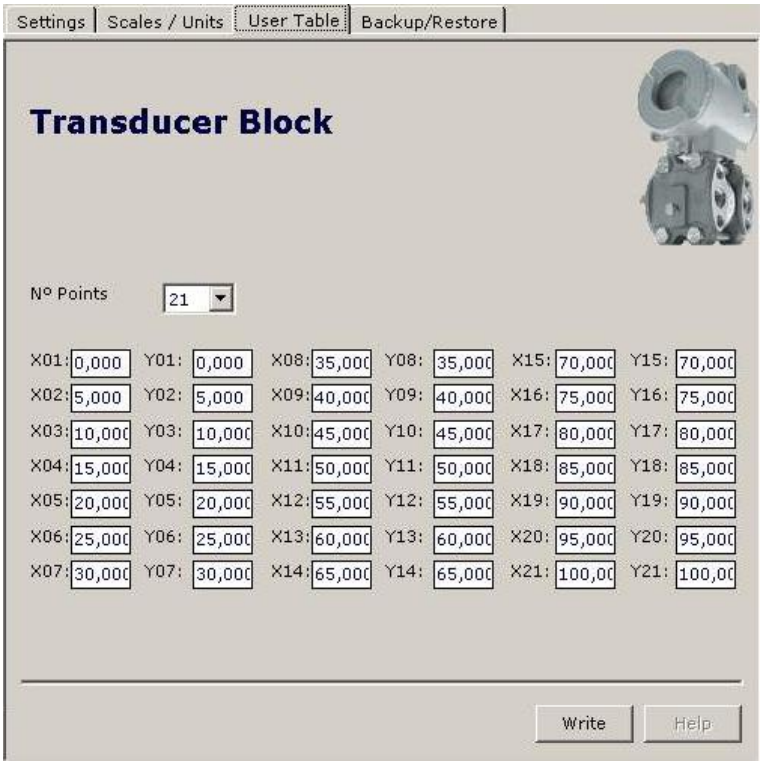

Figure 3.11 - Transducer Configuration – User Table Screen

How to Configure the Analog Input Block

The Analog Input block takes the input data from the Transducer block, selected by channel number, and makes it available to other function blocks at its output. The transducer block provides the input unit of the Analog Input, and when the unit is changed in the transducer, the PV_SCALE unit is changed too. Optionally, a filter may be applied in the process value signal, whose time constant is PV_FTIME. Considering a step change to the input, this is the time in seconds to the PV reaches 63.2 % of the final value. If the PV_FTIME value is zero, the filter is disabled. For more details, please, see the Function Blocks Specifications.

To configure the Analog Input Block in offline mode, please, go to the main menu and select "Device Offline Configuration - Analog Input Block. Using this window, the user can configure the block mode operation, selects the channel, scales and unit for input and output value and the damping.

The user can set the block mode operation.

The user can select PV (Primary Value), Sec Value 1 (Secundary Value 1) or Sec Value 2 (Secundary Value 2) for the channel.

Scale of input value. The unit comes from the transducer block.

Scales and unit for the output value.

The user can set the PV damping. value.

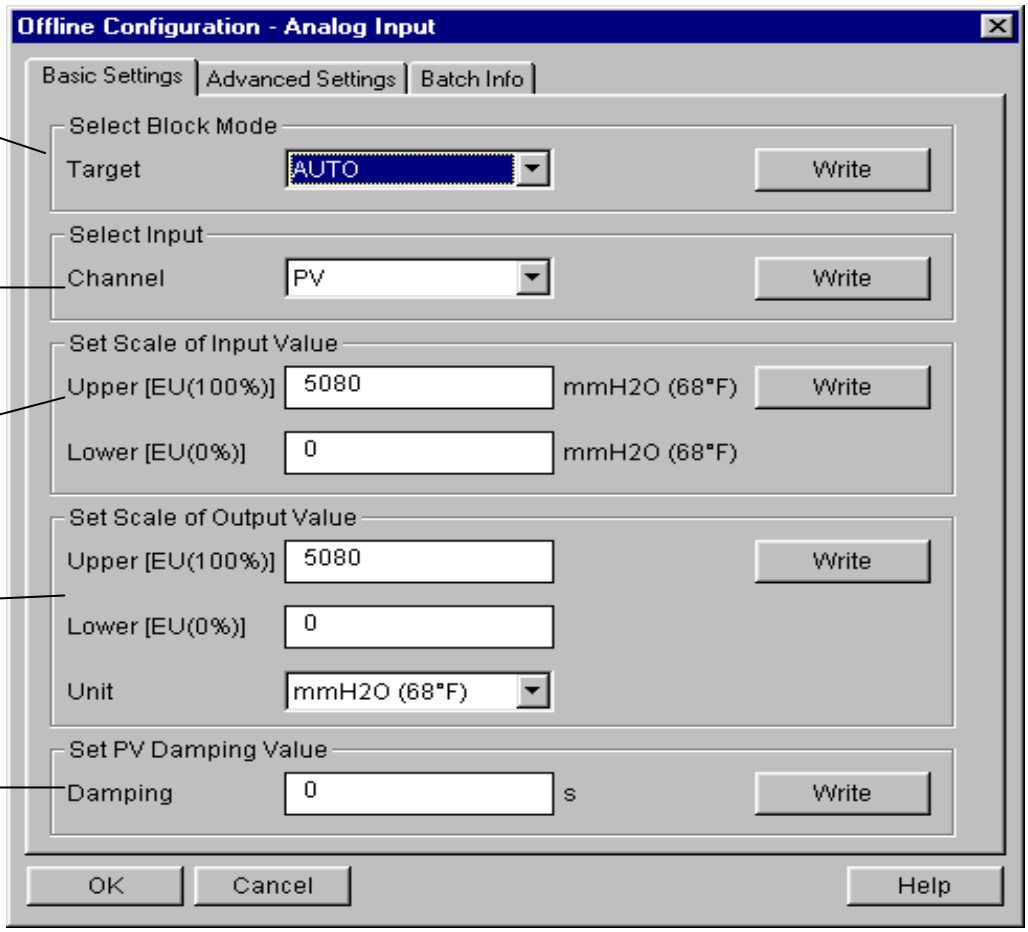

Figure 3.12 – Basic Settings for Analog Input Block

Selecting the window "Advanced Settings", the user can configure the conditions for alarms and warnings, as well the fail safe condition. Please, see the window:

The user can set Alarm/Warning limits.

The fail safe conditions.

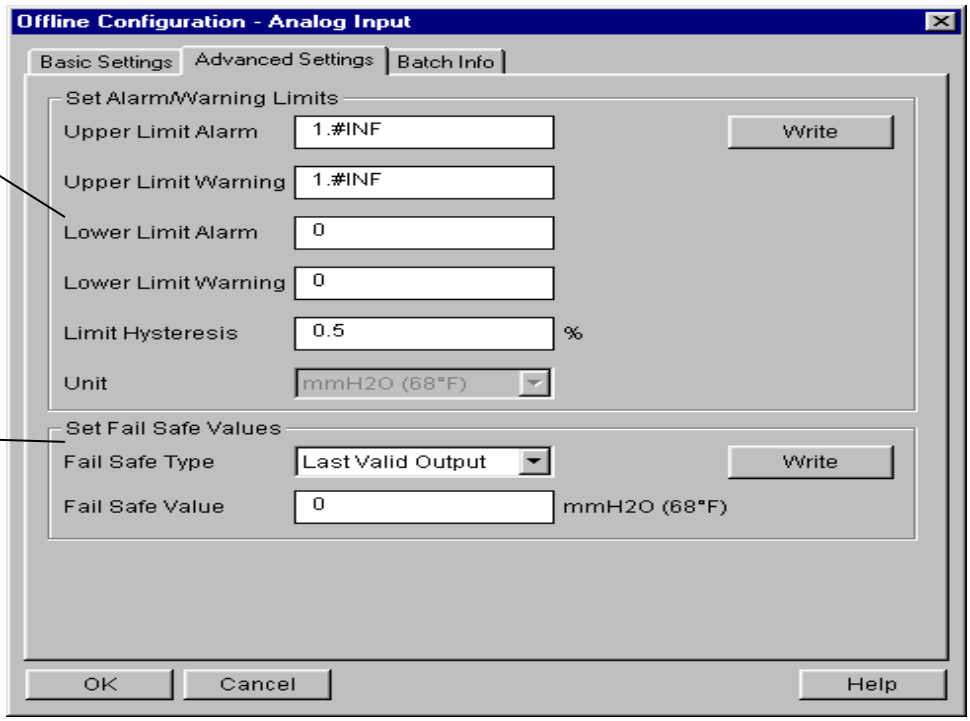

Figure 3.13 – Advanced Settings for Analog Input Block

The user can set the mode block operation.

The user can monitor the output parameter and verify the current state alarm.

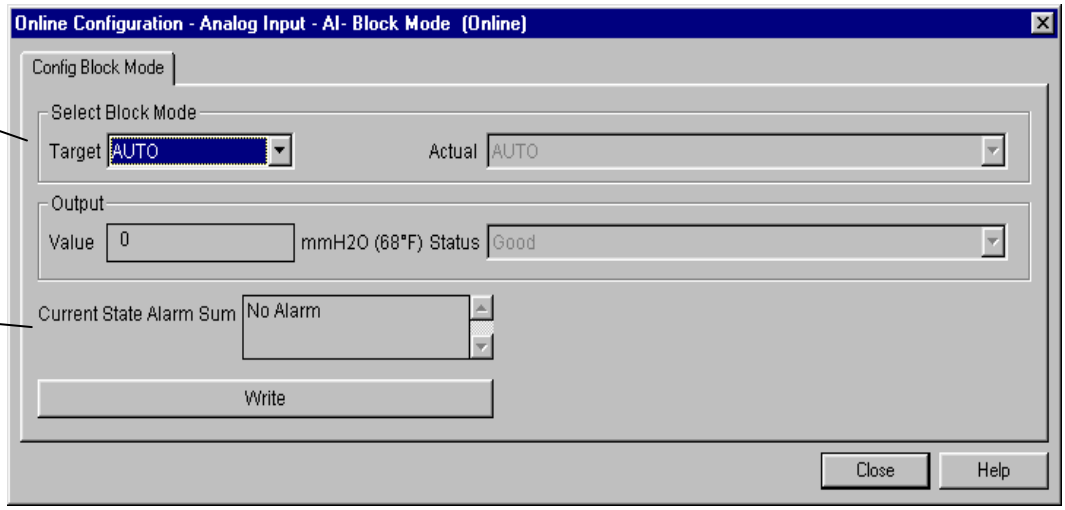

Figure 3.14 – Configuration for Analog Input Block

See the Analog Input Block configuration screens below using the Profibus View.

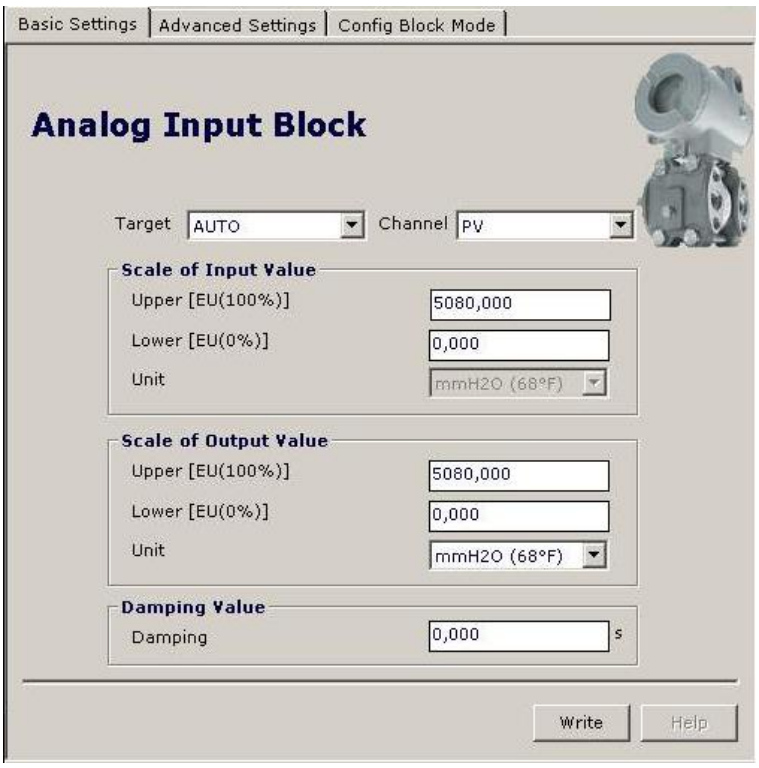

Figure 3.15 - Basic Settings for Analog Input Block

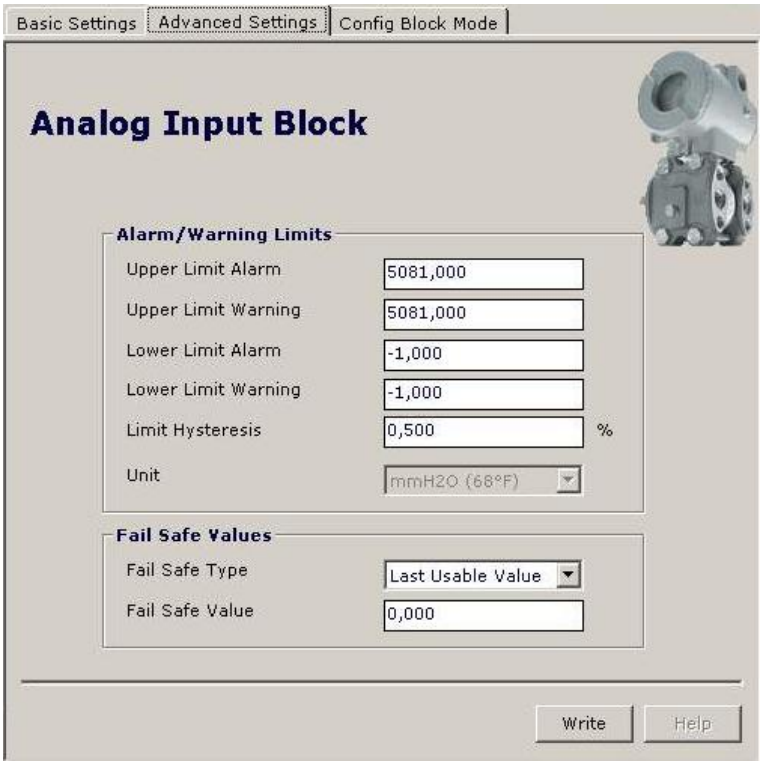

Figure 3.16 - Advanced Settings for Analog Input Block

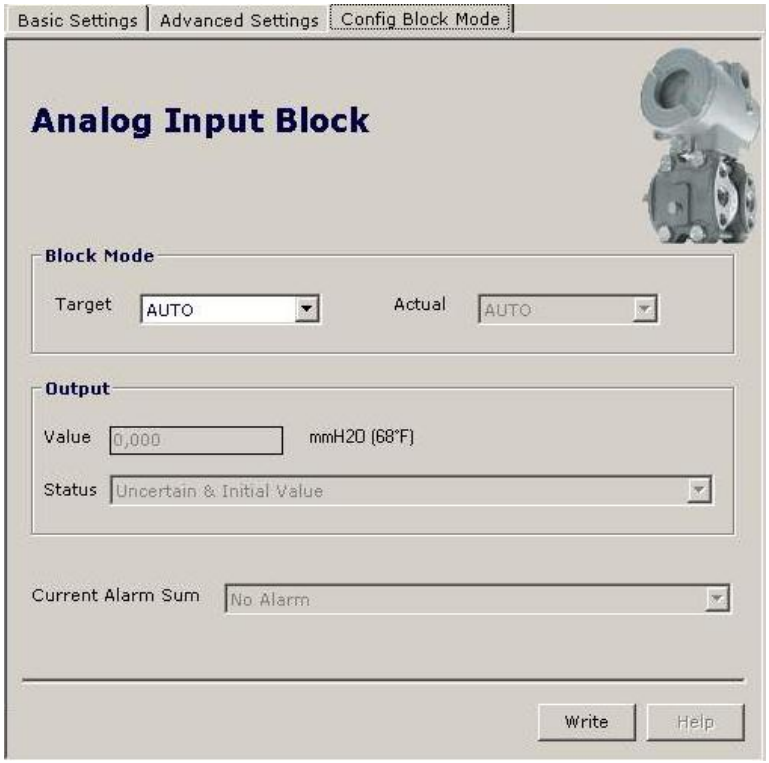

Figure 3.17 - Configuration for Analog Input Block

How to configure the Totalizer Block

The Totalizer function block takes the input data from the Transducer block, selected by channel number, and integrates over the time. This block is normally used to totalize flow, giving total mass or volume over a certain time, or totalize power, giving the total energy.

The Totalizer Function Block integrates a variable (e.g. flow rate or power) in function of the time to the corresponding quantity (e.g., volume, mass or distance). The rate unit of the Totalizer is providing by the transducer block. Internally, the time units are converted in rate units per second. Each rate, multiplied by the block execution time, gives the mass, volume or energy increment per block execution.

The TOTAL is the totalized quantity. The engineering unit used in the output is the UNIT_TOT. The unit of the output must be compatible with the unit of the input provided by the transducer by the channel. Then, if the input the rate is mass flow (like Kg/s, g/min, ton/h) the unit of the output must be mass (like kg, g, ton, lb, etc.).

For more details, please, see the Function Blocks Specifications.

To configure the Totalizer Block, please, go to the main menu and select Configuration - Totalizer Block. In this block, the user can configure the block mode operation, selects the channel, Totalizer mode and unit for the total:

The user can set the block mode.

The user can choose the channel value.

The user can set the conditions for totalization and the unit.

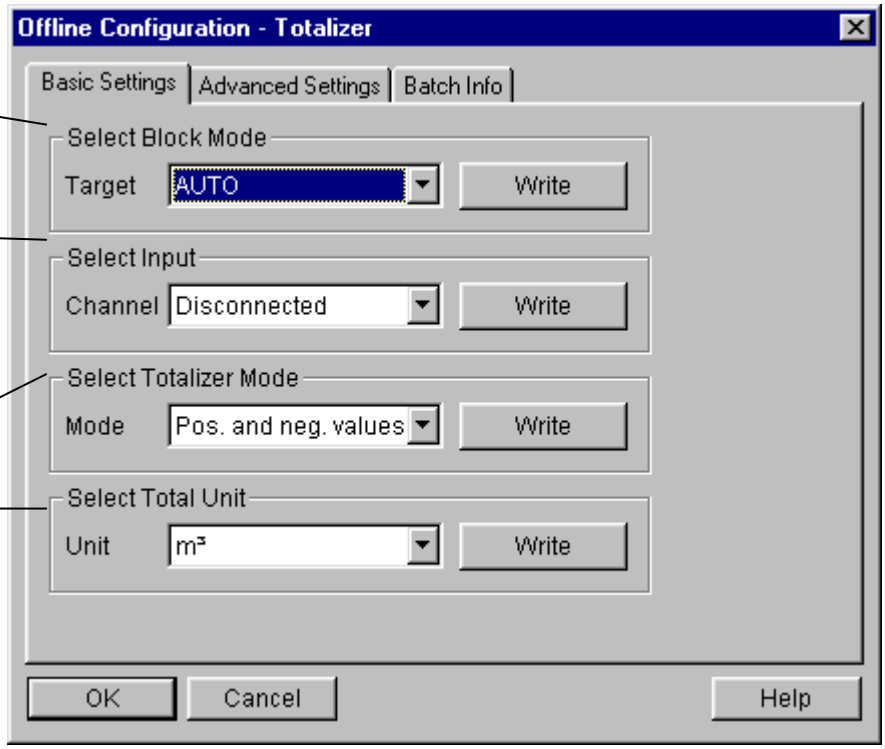

Figure 3.18 – Basic Settings for Totalizer Block

Choosing the "Advanced Settings" window, the user can set alarm and warning limits, as well the fail-safe condition:

Conditions of alarm and warning limits.

The user can set the fail safe value: Run, Hold or Memory.

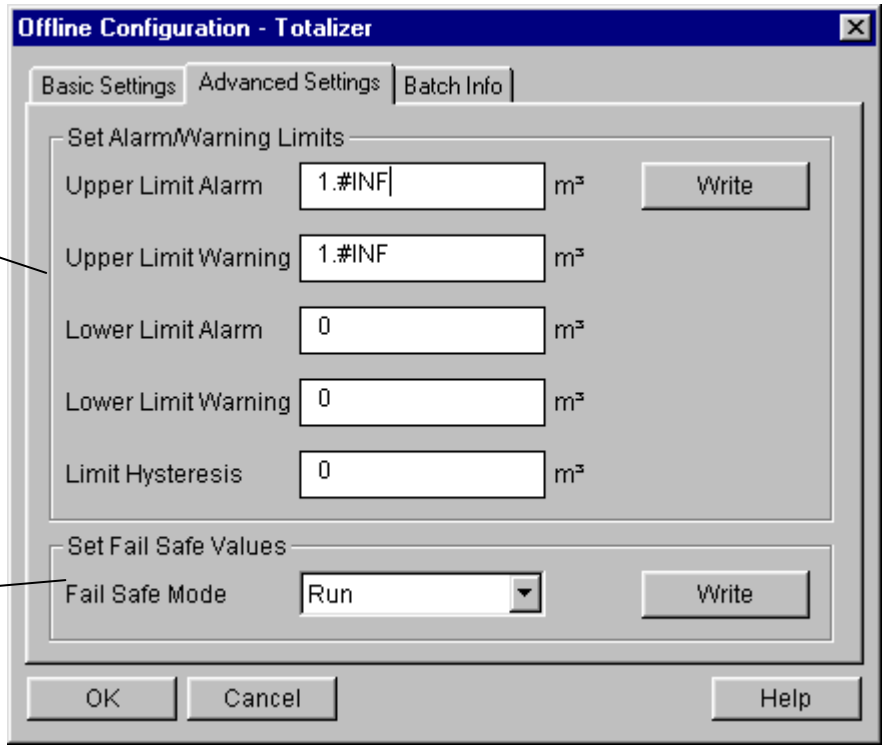

Figure 3.19 – Advanced Settings for Totalizer Block

The user can set the mode block operation.

The user can monitor the totalizer output parameter and verify the current state alarm.

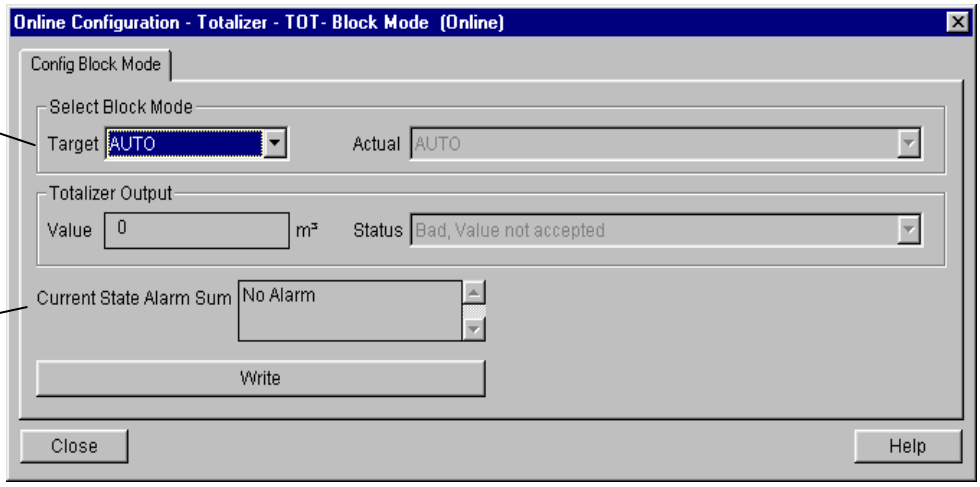

Figure 3.20 - Block Mode for Totalizer Block

The user can select: Totalize, Reset and Preset and enter the value for preset operation.

The user can monitor the totalizer output.

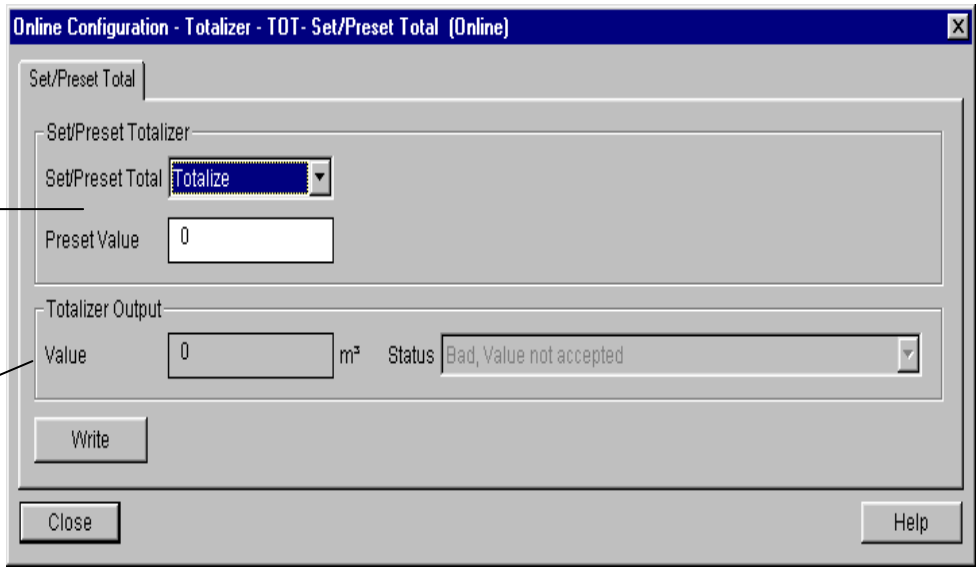

Figure 3.21 – Set / Reset for Totalizer Block

See the Totalizer Block configuration screens below using the Profibus View.

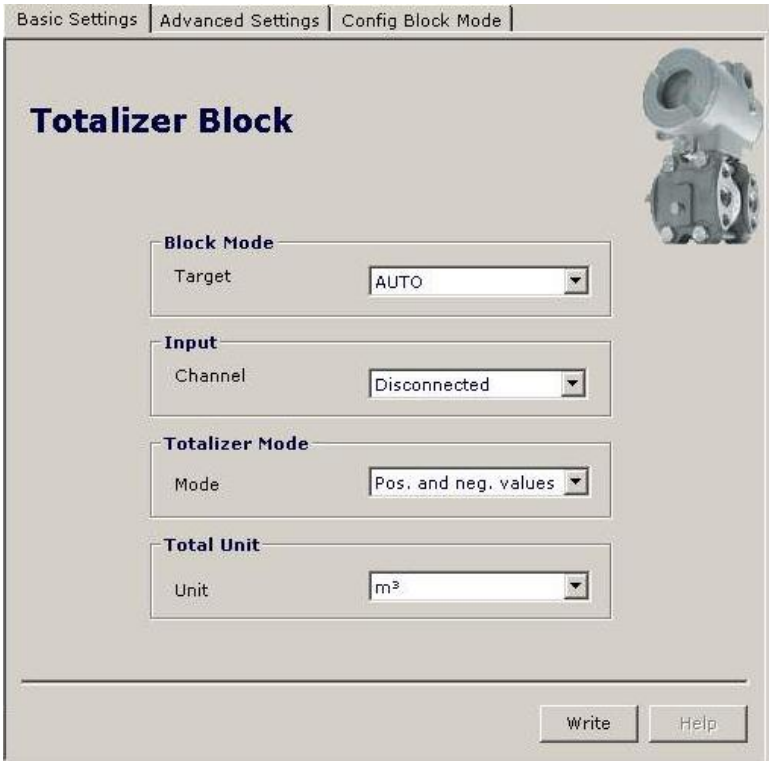

Figure 3.22 - Basic Settings for Totalizer Block

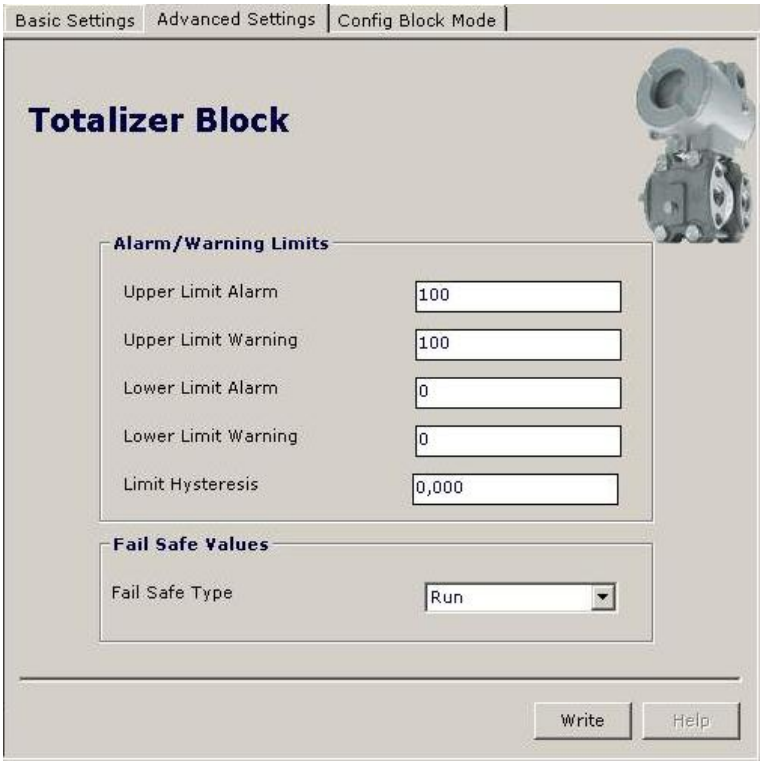

Figure 3.23 - Advanced Settings for Totalizer Block

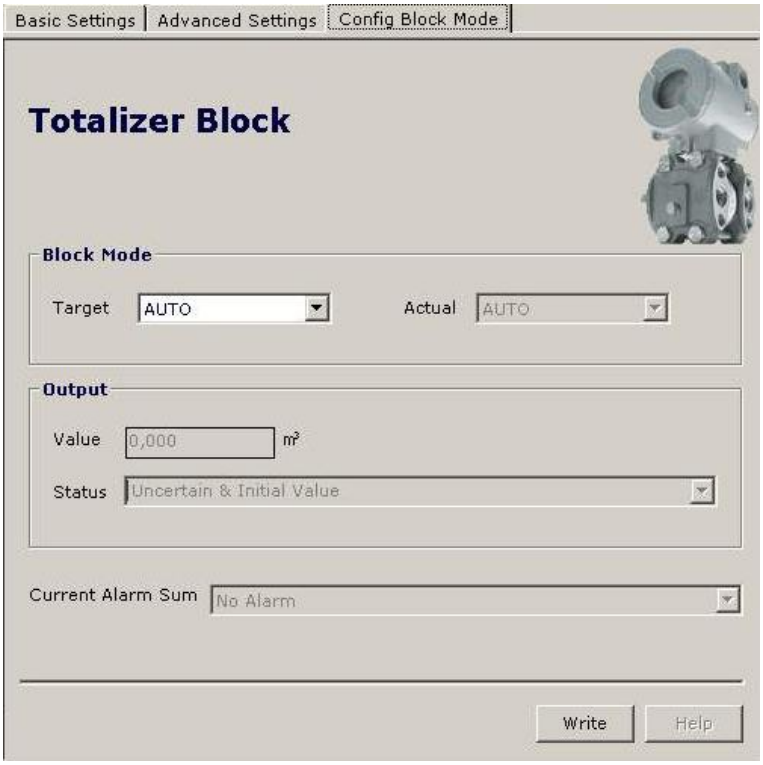

Figure 3.24 - Block Mode for Totalizer Block

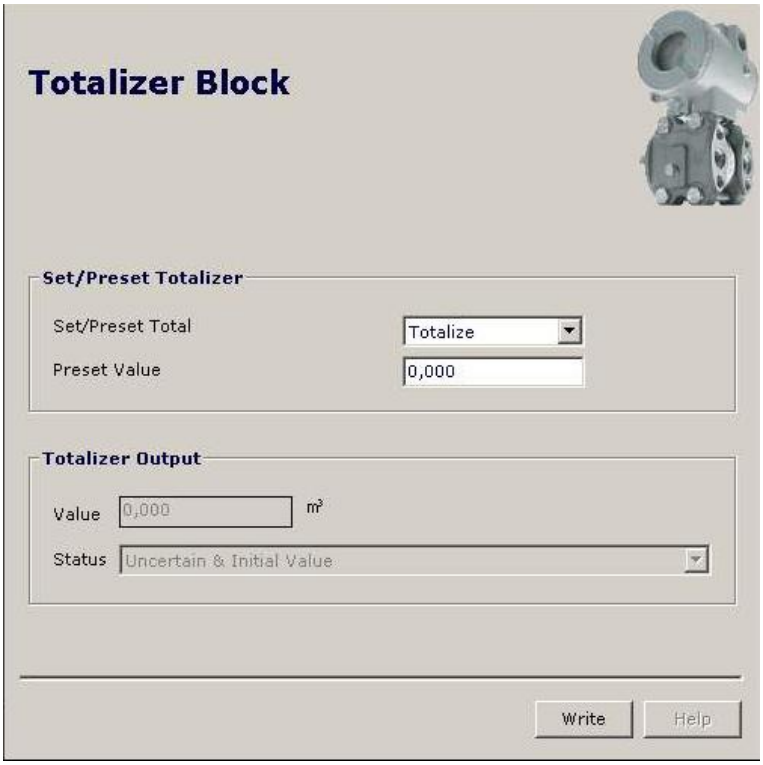

Figure 3.25 – Set / Reset for Totalizer Block

Lower and Upper Trim

NOTE
The calibration screens of lower and upper value of the Profibus View are similar to Simatic PDM screens.

Each sensor has a characteristic curve that establishes a relation between the applied pressure and the sensor signal. This curve is determined for each sensor and it is stored in a memory together with the sensor. When the sensor is connected to the transmitter circuit, the content of its memory is made available to the microprocessor.

Sometimes the value on the transmitter display and transducer block reading may not match the applied pressure.

The reasons may be:

- The transmitter mounting position.
- The user's pressure standard differs from the factory standard.
- The transmitter had its original characterization shifted by over pressurization, over heating or by long term drift.

The **TRIM** is used to match the reading with the applied pressure.
There are two types of trim available:

Lower Trim: It is used to trim the reading at the lower range. The operator informs the **LD303** the correct reading for the applied pressure. The most common discrepancy is the lower reading.

NOTE
Check on section 1 the note on the influence of the mounting position on the indicador. For better accuracy, the trim adjustment should be made in the in the lower and upper values of the operation range values.

Upper Trim: It is used to trim the reading at the upper range. The operator informs the correct reading to **LD303** for the applied pressure.

For best accuracy, trim should be done at the operating range. The figures 3.26 to 3.29 show the trim adjustment operation.

Pressure Trim - LD303

NOTE
The calibration screens Pressure Trim of the Profibus View are similar to Simatic PDM screens.

Via Simatic PDM

It is possible to calibrate the transmitter by means of parameters CAL_POINT_LO and CAL_POINT_HI.

First of all, a convenient engineering unit should be chosen before starting the calibration. This engineering unit is configured by SENSOR_UNIT parameter. After its configuration the parameters related to calibration will be converted to this unit. Then, select Zero/Lower or Upper calibration menu.

The parameter SENSOR_UNIT should be configured according to the Engineering Unit wished for calibrating the device.

After the selection, this key should be pressed to complete the operation

The Engineering Units can be choosen from the Sensor Units list box.

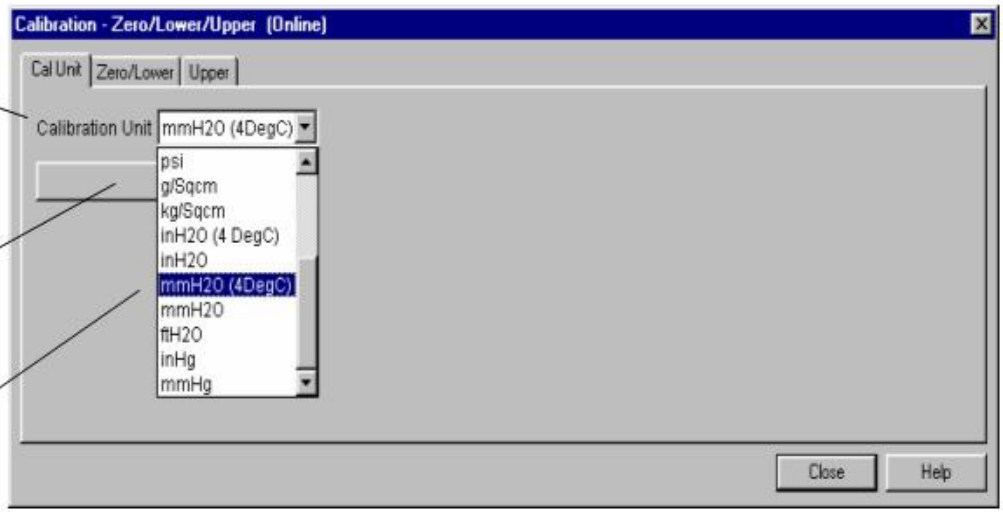

Figure 3.26 – Transducer Configuration Screen

The following engineering unit's codes are defined for pressure according to Profibus PA standard:

UNIT	CODES
inH_2O a 68 °F	1148
inHg a 0 °C	1156
ftH_2O a 68 °F	1154
mmH_2O a 68 °F	1151
mmHg a 0 °C	1158
psi	1141
bar	1137
mbar	1138
g/cm^2	1144
k/cm^2	1145
Pa	1130
kPa	1133
torr	1139
atm	1140
Mpa	1132
inH_2O a 4 °C	1147
mmH_2O a 4 °C	1150

Table 3.3 – Engineering Unit's Code

SENSOR_UNIT allows the user to select different units for calibration purposes than the units defined by SENSOR_RANGE. The SENSOR_HI_LIM and SENSOR_LO_LIM parameters define the maximum and minimum values the sensor is capable of indicating, the engineering units used, and the decimal point.

Let's take the lower value as an example:

Apply to the input zero or the pressure lower value in an engineering unit, this being the same used in parameter SENSOR_UNIT, and wait until the readout of pressure stabilizes.

Write zero or the lower value in parameter CAL_POINT_LO. For each value written a calibration is performed at the desired point.

For this case, a sensor range 3 is used: The LRL is -25400 mmH2O or -1000 inH2O.

The Lower Calibration Point should be entered. This value must be inside of the Sensor range limits allowed for each type of sensor.

After the calibration, the user can see the result for this process.

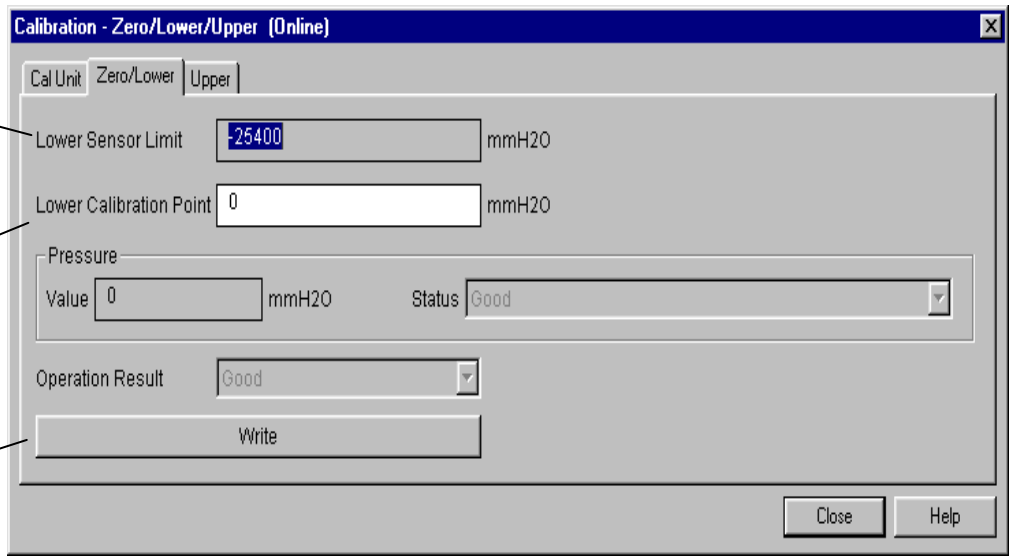

Figure 3.27 –Transducer Configuration Screen

Let's take the upper value as an example:

Apply to the input as the upper value a pressure of 25.400 mmH_2O and wait until the readout of pressure stabilizes. Then, write the upper value as, for example, 25.400 mmH_2O in parameter CAL_POINT_HI. For each value written a calibration is performed at the desired point.

For this case, a sensor range 3 is used: The URL is 25400 mmH2O or 1000 inH2O.

The Upper Calibration Point should be entered. This value must be inside of the Sensor range limits allowed for each type of sensor.

After the calibration, the user can see the result for this process.

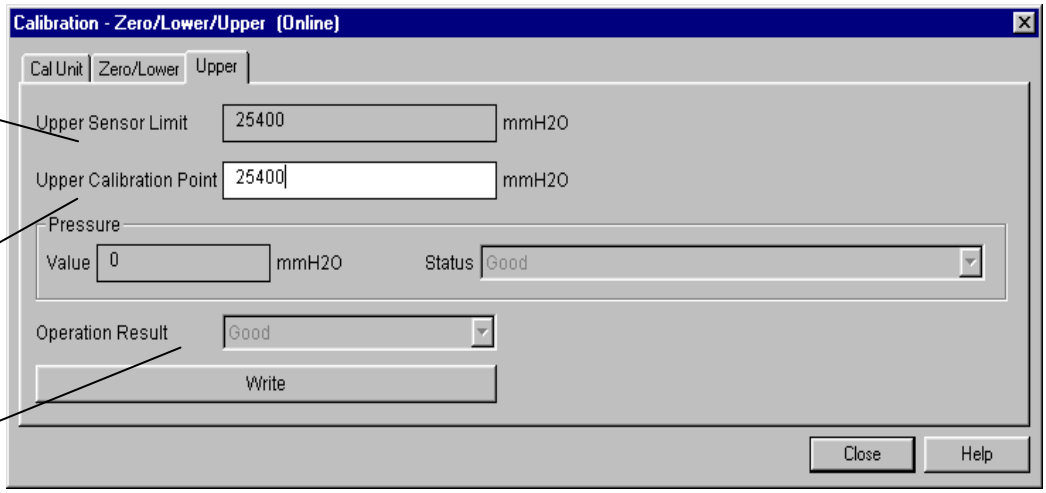

Figure 3.28 – Transducer Configuration Screen

WARNING
It is recommendable, for every new calibration, to save existing trim data, by means of parameter BACKUP_RESTORE, using option "Last Cal Backup".

Via Local Adjustment

In order to enter the local adjustment mode, place the magnetic tool in office "Z" until flag "MD" lights up in the display. Remove the magnetic tool from "Z" and place it in orifice "S". Remove and reinsert the magnetic tool in "S" until the message "LOC ADJ" is displayed. The message will be displayed during approximately 5 seconds after the user removes the magnetic tool from "S". Let's take the upper value as an example:

Apply to the input a pressure of 25.400 mmH_2O.

Wait until the pressure value stabilizes and then actuates parameter UPPER until it reads 25.400.

For the lower value the procedure is the same, but we need to actuate in the parameter LOWER.

NOTE
Trim mode exit via local adjustment occurs automatically should the magnetic tool not be used during some seconds. Keep in that even when parameters LOWER or UPPER already present the desired value, they must be actuated so that calibration is performed.

Limit Conditions for Calibration:
For every writing operation in the transducer blocks there is an indication for the operation associate with the waiting method. These codes appear in parameter XD_ERROR. Every time a calibration is performed. Code 16, for example, indicates a successfully performed operation.

Upper:
SENSOR_RANGE_EUO < NEW_UPPER < SENSOR_RANGE_EU100 * 1.25
Otherwise, XD_ERROR = 26.
(NEW_UPPER - PRIMARY_VALUE) < SENSOR_RANGE_EU100 * 0.1
Otherwise, XD_ERROR = 27.
(NEW_UPPER - CAL_POINT_LO) >CAL_MIN_SPAN * 0,75
Otherwise, XD_ERROR = 26.

NOTE
Codes for XD_ERROR: 16: Default Value Set; 22: Out of Range; 26: Invalid Calibration Request; 27: Excessive Correction.

Characterization Trim

NOTE
The calibration screens Characterization Trim of the Profibus View are similar to Simatic PDM screens.

It is used to correct the sensor reading in several points.

Use an accurate and stable pressure source, preferably a dead-weight tester, to guarantee the accuracy must be at least three times better than the transmitter accuracy. Wait for the pressure to stabilize before performing trim.

The sensor characteristic curve at a certain temperature and for certain ranges may be slightly nonlinear. This eventual non-linearity may be corrected through the Characterization Trim.

The user may characterize the transmitter throughout the operating range, obtaining even better accuracy.

The characterization is determined from two up to five points. Just apply the pressure and tell the transmitter the pressure that is being applied.

WARNING
The characterization trim changes the transmitter characteristics. Read the instructions carefully and certify that a pressure standard with accuracy 0.03% or better is being used, otherwise the transmitter accuracy will be seriously affected.

Characterize a minimum of two points. These points will define the characterization curve. The maximum number of points is five. It is recommended to select the points equally distributed over the desired range or over a part of the range where more accuracy is required.

The Figure 3.29 shows the window of Simatic PDM to characterize a new curve. Note that FACTORY_CURVE_X indicates the applied pressure according to standard pressure source and FACTORY_CURVEX_Y indicates measured pressure value to **LD303.**

The number of points is configured in parameter FACTORY_CURVE_LENGTH, being in the maximum 5 points. The entry points will be configured in the FACTORY_CURVE_X and of output in the FACTORY_CURVE_Y.

The Parameter FACTORY_CURVE_BYPASS controls the enabling/disabling of the curve and has the following options:

- "Disable ",
- "Enable and Backup Cal " ,
- "Disable and Restore Cal " ,
- "Disable or Allows to enter the points"

To configure the points of the curve, the option "Disable or Allows to enter the points" must be chosen. Then press the "Characterization Cal". The following message appears: "This Function alters XMTR characteristics. Proceed? Y/N". To proceed, select "Yes". A new message appears: "Is XMTR connected to accurate pressure standard ?". To proceed, select "Yes". Apply the desired pressure and wait that the same one stabilizes. If the pressure is not stable, select "No-read again". If it is stable, enter "Yes" and then, type the applied pressure P1. Repeat this procedure for the next point P2. After that, if the user wants to configure more points, just repeat this procedure up to 5 points. If not, just select "No" for the question "Do you want to configure more points? ".

After configuring the points, the user needs to qualify the curve. The option "Enable and backup cal", enables the curve and save the calibration settings. The option "Disable and restore the cal", disables the curve and restores the calibration settings. The option "Disable", just disables the curve and does not take care about the calibration settings.

By the list box the user can enable or disable the Characterization Curve, enter the points, restore or backup the curve entered.

After choosing the condition for the curve, please, press this key to initiate the characterization curve method.

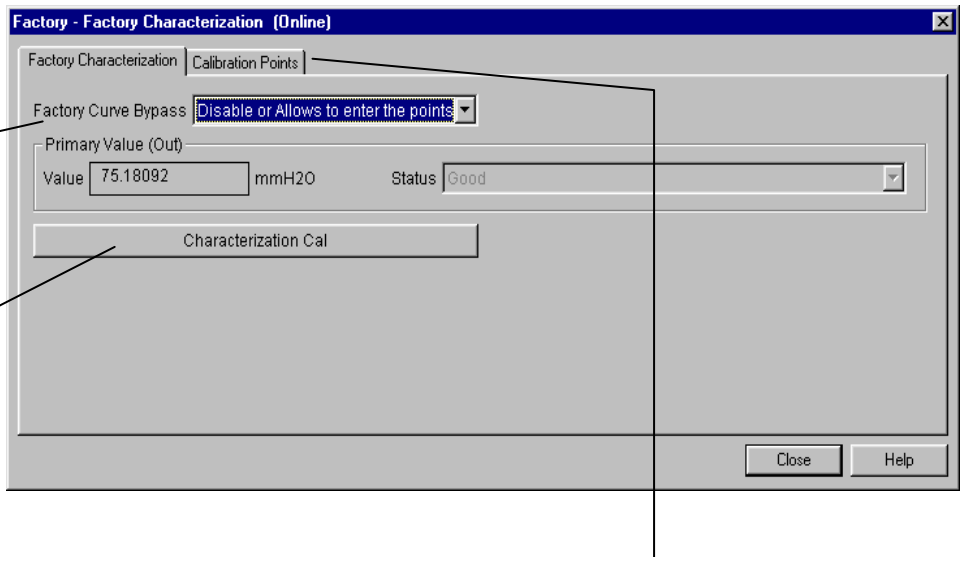

Select this page to see the configured points.

Figure 3.29 – The Characterization Curve Configuration

The Characterization Curve can have a minimum of 2 and up to 5 points. These points should be between the calibrated range for better results.

Sensor Information

The main information about the transmitter can be accessed selecting the Transducer block folder option as shown on the next figure. The sensor information will be displayed as shown below:

Sensor Construction Information.

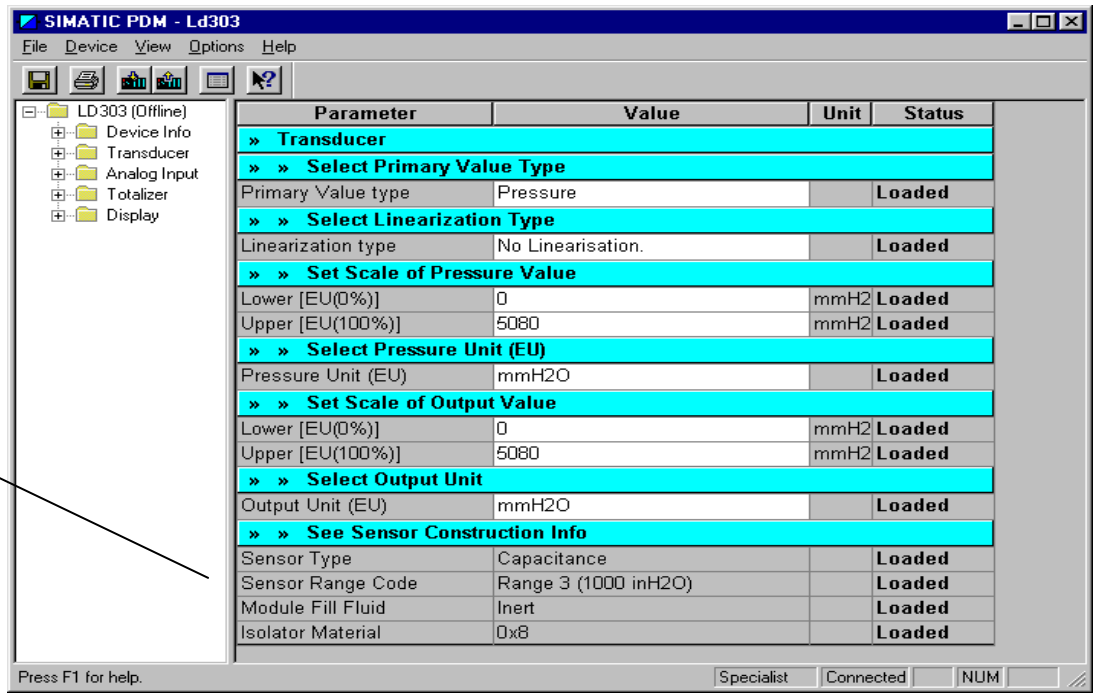

Figure 3.30 – Transducer Block – Sensor Information

Some parameters are only factory configured (e.g. Sensor Type, Module Fill Fluid, etc.).

Temperature Trim

NOTE
The calibration screens Temperature Trim the Profibus View are similar to Simatic PDM screens.

Write in parameter CAL_TEMPERATURE any value in the range -40 °C to +85 °C. After that, check the calibration performance using parameter TEMPERATURE. The user can select the unit using the parameter TEMPERATURE_UNIT. Normally, its operation is done by a method in the factory.

The user can select the temperature unit.

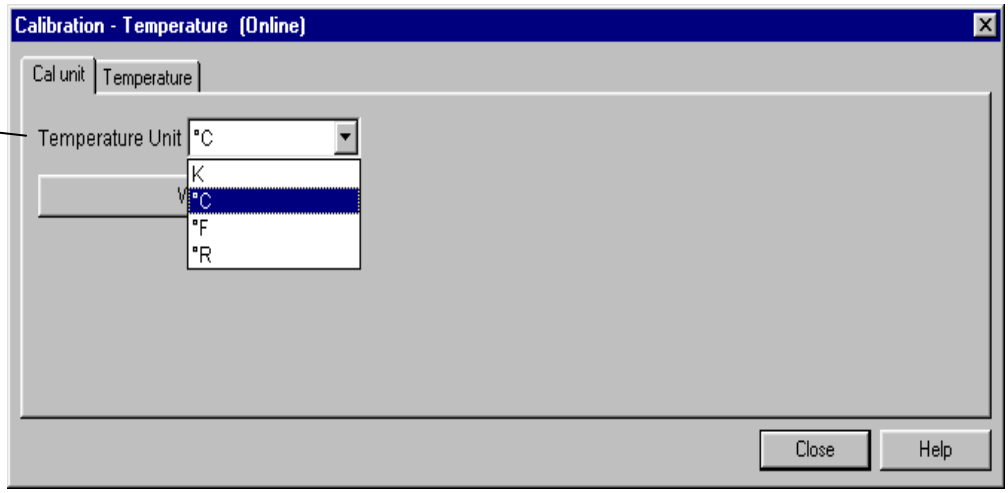

Figure 3.31 – The Temperature Screen

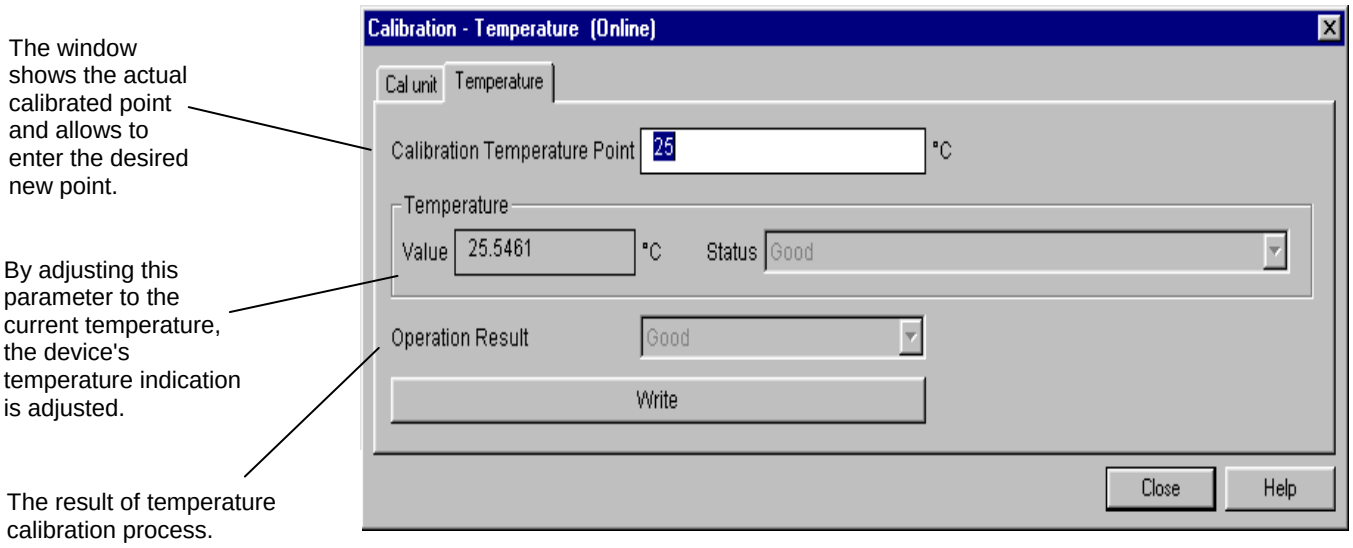

Figure 3.32 – The Temperature Trim Configuration Screen

Sensor Data Reading

All time that transmitter **LD303** is on, is verified if the serial number of the sensor in the sensor board is the same that the recorded serial number in EEPROM in the main board. When these numbers are different (a swap of sensor set or main board was carried through) the data stored in the EEPROM of sensor board is copied to the EEPROM of the main board.

Through the parameter BACKUP_RESTORE, also this reading can be made, choosing the option "Sensor Data Restore". The operation, in this case, is made independent of the sensor serial number. Through the option "Sensor Data Backup", the sensor data stored in the main board Eeprom memory can be saved in the EEPROM of the sensor board. (This operation is done at factory).

Through this parameter, we can recover default data from factory about sensor and last saved calibration settings, as well as making the rescue of calibrations. We have the following options:

- **Factory Cal Restore:** Recover last calibration settings made at factory;
- **Last Cal Restore:** Recover last calibration settings made by user and saved as backup;
- **Default Data Restore:** Restore all data as default;
- **Sensor Data Restore:** Restore sensor data saved in the sensor board and copy them to main board Eeprom memory;
- **Factory Cal Backup:** Copy the actual calibration settings to the factory ones;
- **Last Cal Backup:** Copy the actual calibration settings to the backup ones;
- **Sensor Data Backup:** Copy the sensor data at main board Eeprom memory to the Eeprom memory located at the sensor board;
- **None:** Default value, no action is done.

On the main menu, selecting "Device Factory - Backup/Restore", the user can select backup and restore operations:

NOTE
The backup setting screen of the Profibus View is similar to Simatic PDM screen.

This parameter is used to save or restore the default, factory or user configuration stored at the sensor module.

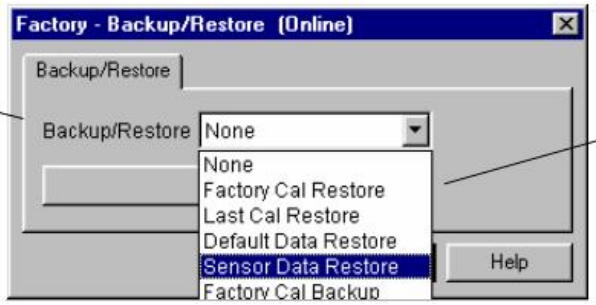

By selecting the options contained in the list box, operations of backup and restore data in the sensor module can be selected.

Figure 3.33 – Transducer Block – Backup/Restore

Transducer Display – Configuration

NOTE
The Transducer Display Configuration screen of the Profibus View is similar to Simatic PDM screen.

Using the Profibus View or Simatic PDM is possible to configure the Display Transducer block. As the name described it is a transducer due the interfacing of its block with the LCD hardware.

The Transducer Display is treated as a normal block by any configuration tool. It means, this block has some parameters and those ones can be configured according to customer's needs.

The customer can choose up to six parameters to be shown at LCD display they can be parameters just for monitoring purpose or for acting locally in the field devices by using a magnetic tool. The seventh parameter is used to access the physical device address. The user can change this address according to his application. To access and configure the Display Block, please, go to the main menu select "Device OnLine Configuration - Display Block":

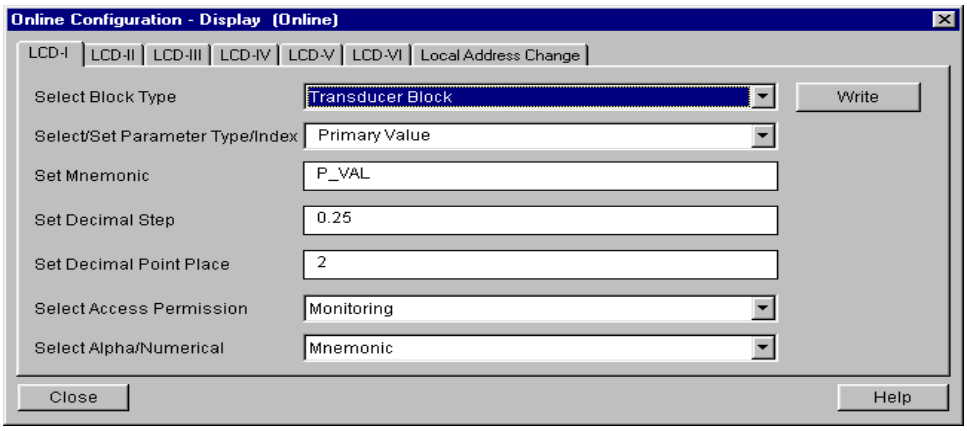

Figure 3.34 – Display Block

Display Transducer Block

The local adjustment is completely configured by Profibus View or Simatic PDM. It means, the user can select the best options to fit his application. From factory, it is configured with the options to set the Upper and Lower trim, for monitoring the input transducer output and check the Tag. Normally, the transmitter is much better configured by Profibus View or Simatic PDM, but the local functionality of the LCD permits an easy and fast action on certain parameters, since it does not rely on communication and network wiring connections. Among the possibilities by Local Adjustment, the following options can be emphasized: Mode block, Outputs monitoring, Tag visualization and Tuning Parameters setting.

The interface between the user is described very detailed on the "General Installation, Operation and Maintenance Procedures Manual". Please take a detailed look at this manual in the chapter related to "Programming Using Local Adjustment". It is significantly the resources on this transducer display, also all the Series 303 field devices from SMAR has the same methodology to handle with it. So, since the user has learned once, he is capable to handle all kind of field devices from SMAR.

All function block and transducers defined according Profibus PA have a description of their features written, by the Device Description Language.

This feature permits those third parties configuration tools enabled by Device Description Service technology can interpret these features and make them accessible to configure. The Function Blocks and Transducers of Series 303 have been defined rigorously according the Profibus PA specifications in order to be interoperable to other parties.

In order to able the local adjustment using the magnetic tool, it is necessary to previously prepare the parameters related with this operation via System Configuration.

There are six groups of parameters, which may be pre-configured by the user in order to able, a possible configuration by means of the local adjustment. As an example, let's suppose that you don't want to show some parameters; in this case, simply select "None" in the parameter, "Select Block Type". Doing this, the device will not take the parameters related (indexed) to its Block as a valid parameter.

Definition of Parameters and Values

Idx	Parameter	Data Type (length)	Valid Range/ Options	Default Value	Units	Store	Description
7	BLOCK_TAG_PARAM	Visible String			None	S	This is a tag of the block to which the parameter belongs to use up to a maximum of 32 characters.
8	INDEX_RELATIVE	Unsigned16	0-65535		None	S	This is the index related to the parameter to be actuated or viewed (1, 2...).
9	SUB_INDEX	Unsigned8	1-255		None	S	To visualize a certain tag, opt for the index relative equal to zero, and for the sub-index equal to one.
10	MNEMONIC	Visible String			None	S	This is the mnemonic for the parameter identification (maximum of 16 characters). Choose the mnemonic, preferably with no more than 5 characters because, this way, it will not necessary to rotate it on display.
11	INC_DEC	Float			None	S	It is the increment and decrement in decimal units when the parameter is Float or Float Status time, or integer, when the parameter is in whole units.
12	DECIMAL_POINT_NUMBER	Unsigned8	0-4		None	S	This is the number of digits after the decimal point (0 to 3 decimal digits)
13	ACCESS	Unsigned8	Monit/Action		None		The access allows the user to read, in the case of the "Monitoring" option, and to write when "action" option is selected, and then the display will show the increment and decrement arrows.
14	ALPHA_NUM	Unsigned8	Mnem/Value		None	S	These parameters include two options: value and mnemonic. In option value it is possible to display data both in the alphanumeric and in the numeric fields, this way, in the case of a data higher than 10000, it will be shown in the alphanumeric field.
63	DISPLAY_REFLESH	Unsigned8	1		None	D	

In option mnemonic, the display may show the data in the numeric field and the mnemonic in the alphanumeric field.

For devices where the software version is higher or equal to 1.10, please see the configuration of local adjustment using the local adjustment, in the Installation, operation and maintenance procedures manual.

In case you wish to visualize a certain tag, opt for the index relative equal to "tag". To configure other parameters just select "LCD-II" up to "LCD-VI" windows:

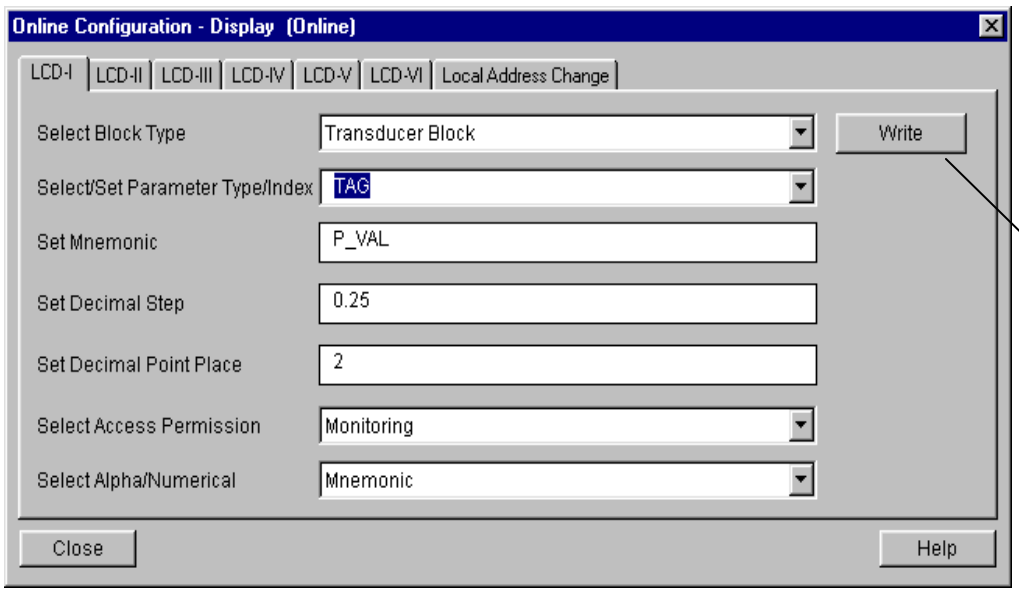

The option "Write" should be selected in order to execute the upgrade of local adjustment programming tree.
After its step all the selected parameters will be shown on the LCD display.

Figure 3.35 – Parameters for Local Adjustment Configuration

The window "Local Address Change" allows the user "enable/disable" the access to changing the physical device address.

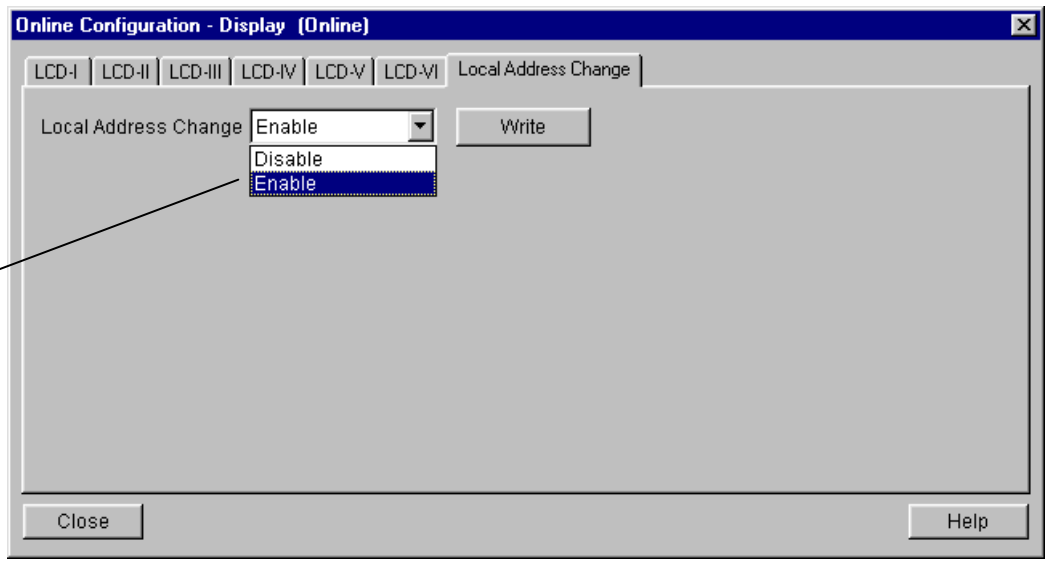

When the option "enable" is selected, the user can change the physical device address.

Figure 3.36 – Parameters for Local Adjustment Configuration

When the user enter into the local adjustment and rotate the parameters using the magnetic tool, after escaping to normal operation, e.g, the monitoring, if the parameter when the magnetic tool is removed has "Access Permission equal to "monitoring", then this last parameter will be shown at the LCD.

Always on the LCD interface will be shown two parameters at the same time, switching between the configured parameter at the LCD-II and the last monitoring parameter. If the user do not want to show two parameters at the same time, it is only necessary to opt for "none" when configure the LCD-II:

Selecting "None", only the last chosen monitoring parameter will be shown at LCD.

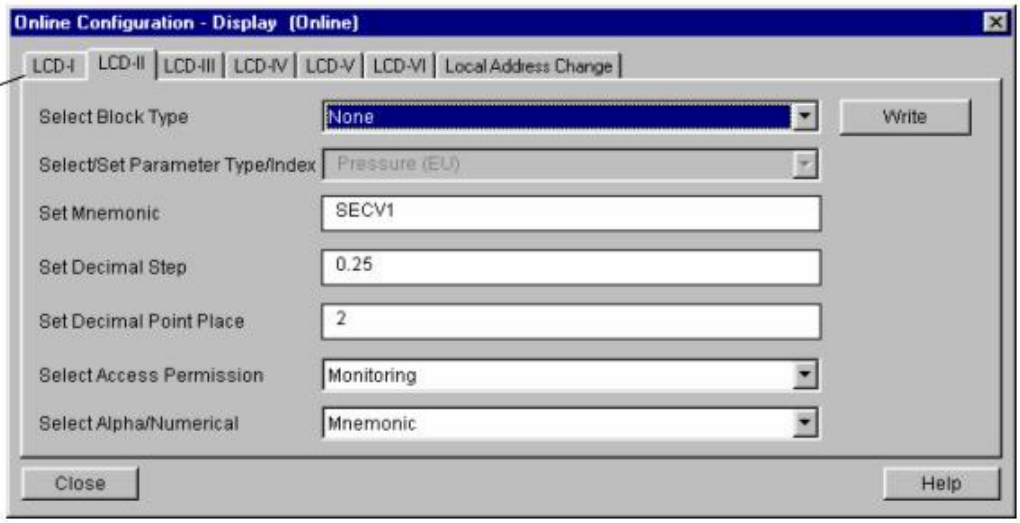

Figure 3.37 - Parameters for Local Adjustment Configuration

Local Adjustment Tree - Quick Guide

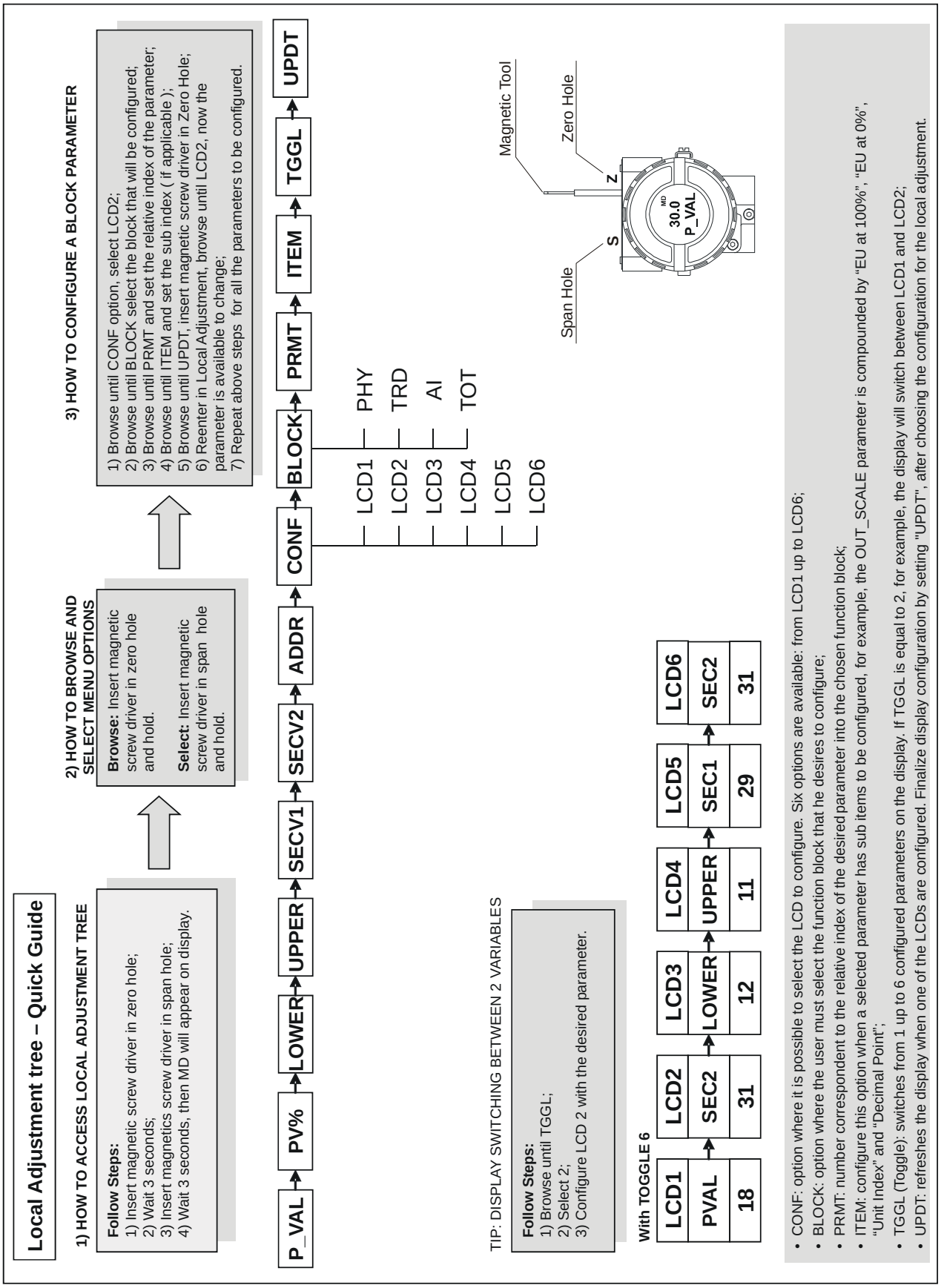

The user can select the "Mode Block" parameter at the LCD. In this case is necessary to select the index equal to "Mode Block":

With this option, the Mode Block parameter is shown at the LCD.

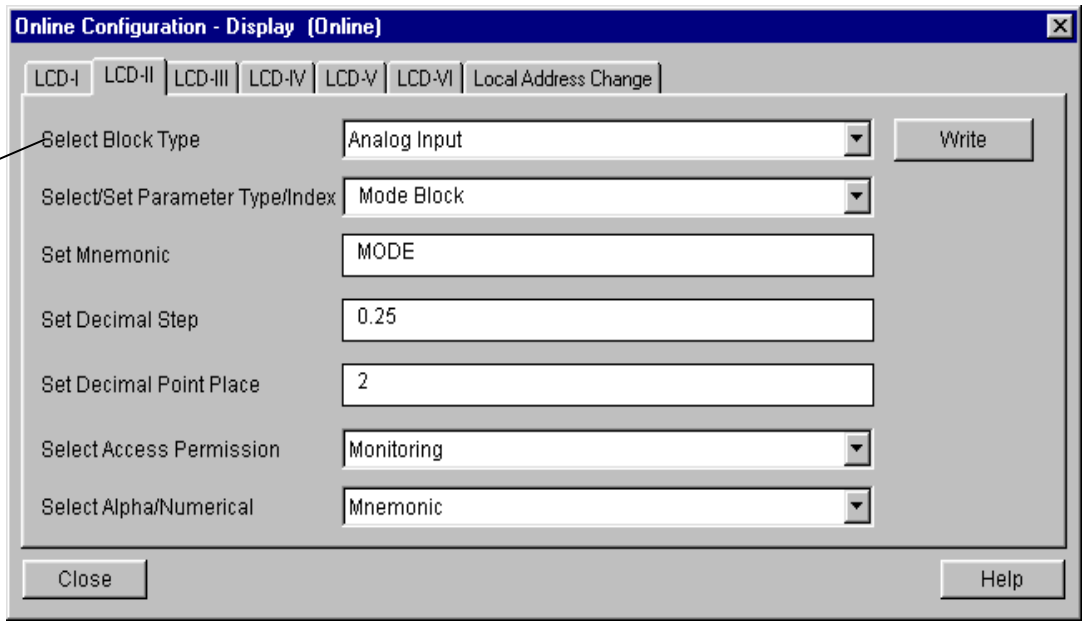

Figure 3.38 – Parameters for Local Adjustment Configuration

Programming Using Local Adjustment

The local adjustment is completely configured by Profibus View or Simatic PDM. It means, the user can select the best options to fit his application. From factory, it is configured with the options to set the Upper and Lower trim, for monitoring the input transducer output and check the Tag. Normally, the transmitter is much better configured by configuration tool, but the local functionality of the LCD permits an easy and fast action on certain parameters, since it does not rely on communication and network wiring connections. Among the possibilities by Local Adjustment, the following options can be emphasized: Mode block, Outputs monitoring, Tag visualization and Tuning Parameters setting.

The interface between the user is also described very detailed on the "General_Installation, Operation and Maintenance Procedures Manual" Please take a detailed look at this manual in the chapter related to "Programming Using Local Adjustment". It is significantly the resources on this transducer display, also all the Series 303 field devices from SMAR has the same methodology to handle with it. So, since the user has learned once, he is capable to handle all kind of field devices from SMAR. This Local adjustment configuration is a suggestion only. The user may choose his preferred configuration via configuration toll, simply configuring the display block.

The transmitter has two holes marked S and Z, right underneath the identification plate. They access two reed switches that can be activated by inserting the handle of the magnetic tool. This procedure enables the adjustment of the most important parameters of blocks. It also enables pre-configuration of the communication. See figure 3.39.

The table 3.5 describes what the actions in the S and Z holes cause in the **LD303** when the local adjustment is enable.

Without display the local adjustment is not possible.

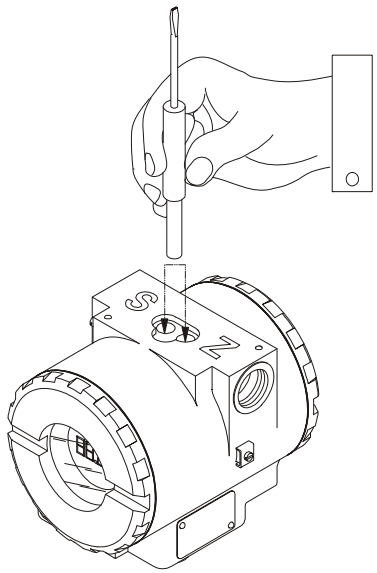

Figure 3.39 – Local Adjustment Holes

Action in	Cause
S	Starts and moves among the available functions.
Z	Selects the function showed in the indicator.

Table 3.5 – Purpose of the holes on the Housing

J1 Jumper Connection

If J1 jumper (see figure 3.40) is connected to the bolts under the word ON parameters could be simulated, through SIMULATE parameter, of the function blocks.

W1 Jumper Connection

If W1 jumper (see figure 3.40) is connected to the bolts under the word ON, the local adjustment programming tree is enabled and then important block parameters can be adjusted and communication can be pre-configured via local adjustment.

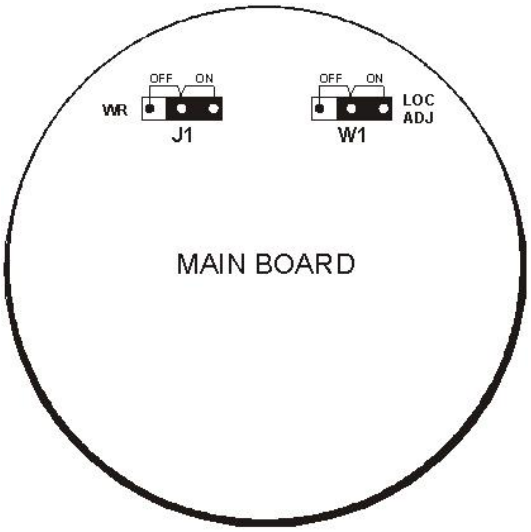

Figure 3.40 - J1 and W1 Jumpers

In order to start the local adjustment, place the magnetic tool in **Z** orifice and wait until letters **MD** are displayed.

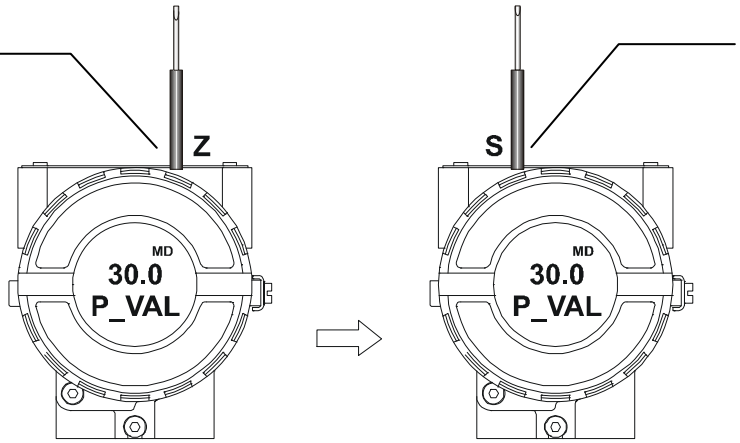

Place the magnetic tool in **S** orifice and wait for 5 seconds.

Figure 3.41 - Step 1 - LD303

Remove the magnetic tool from **S** orifice.

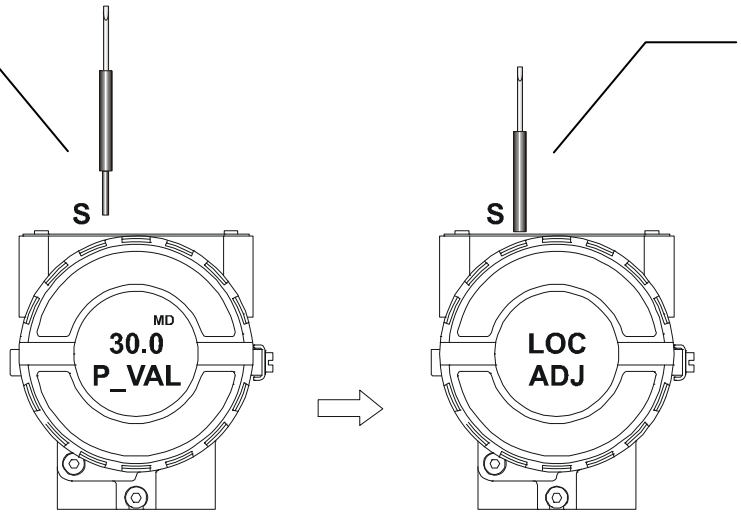

Insert the magnetic tool in **S** orifice once more and **LOC ADJ** should be displayed.

Figure 3.42 - Step 2 - LD303

Place the magnetic tool in **Z** orifice. If this is the first configuration, the option shown on the display is the **TAG** with its corresponding mnemonic configured by the configurator. Otherwise, the option shown on the display will be the one configured in the prior operation. By keeping the tool inserted in this orifice, the local adjustment menu will rotate.

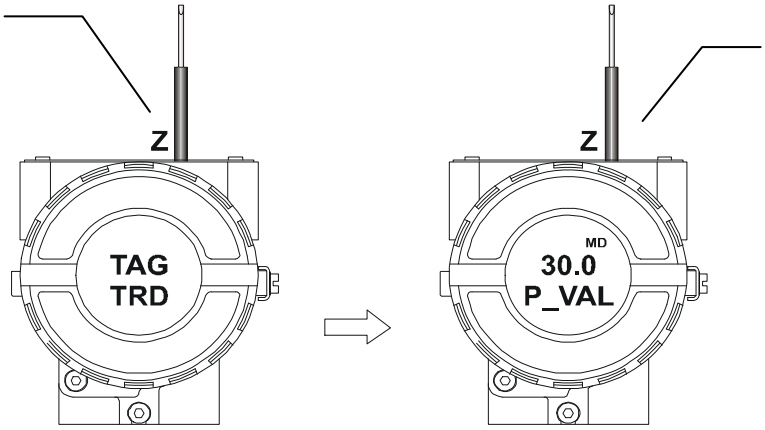

Suppose to be the first configuration. In this case, the option (**P_VAL**) is showed with its respective value. To change this value, insert the magnetic tool in **S** orifice, and keep it there until getting the desired value.

Figure 3.43 – Step 3 – LD303

In order to select the next function, the lower value (**LOWER**), move the magnetic tool from **S** to **Z** orifice. An arrow pointing upward (↑) increments the value and an arrow pointing downward (↓) decrements the value. In order to increment the value, insert and keep the tool in **S** orifice until getting the desired value.

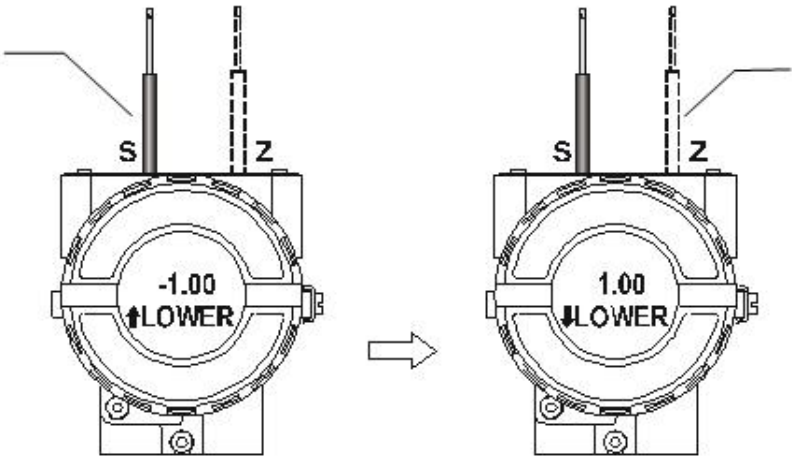

In order to decrement the lower value, place the magnetic tool in **Z** orifice to shift the arrow to the downward position. After that, insert and keep the tool in **S** until getting the desired value.

Figure 3.44 - Step 4 - LD303

In order to select the next function, the upper value (**UPPER**), move the magnetic tool from **S** to **Z** orifice. An arrow pointing upward (↑) increments the value and an arrow pointing downward (↓) decrements the value. In order to increment the value, insert and keep the tool in **S** orifice until getting the desired value.

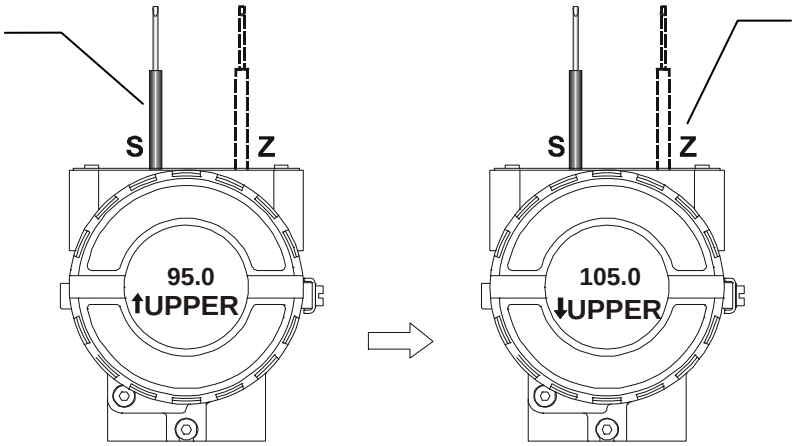

In order to decrement the upper value, place the magnetic tool in **Z** orifice to shift the arrow to the downward position. After that, insert and keep the tool in **S** orifice until getting the desired value.

Figure 3.45 - Step 5 - LD303

In order to select the next function, the address value (**ADDR**), move the magnetic tool from **S** to **Z** orifice. An arrow pointing upward (↑) increments the value and an arrow pointing downward (↓) decrements the value. In order to increment the value, insert and keep the tool in **S** orifice until getting the desired value.

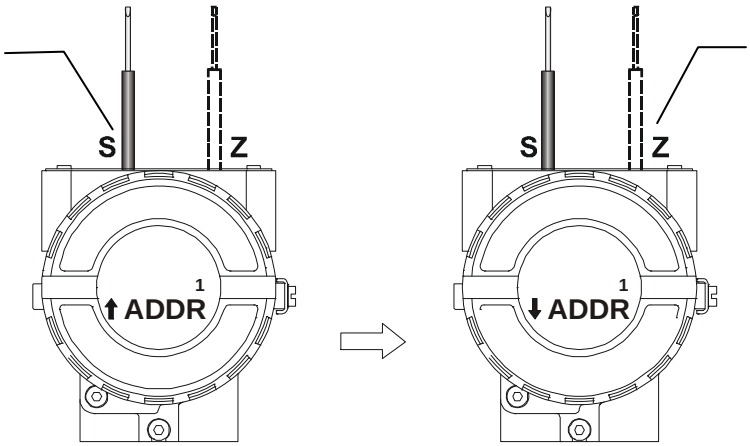

In order to decrement the address value, place the magnetic tool in **Z** orifice to shift the arrow to the downward position. After that, insert and keep the tool in **S** orifice until getting the desired value.

Figure 3.46 - Step 6 - LD303

Cyclical Diagnosis

Via cyclic communication is possible to verify diagnostics from the **LD303** using the Profibus Master Class 1 or even via acyclic communication via Master Class 2. The Profibus-PA devices provide up to 4 standard diagnoses bytes via Physcial Block (see figure 3.47 and 3.48) and when the most significant bit of the fourth Byte is "1", the diagnose will extend the information in more 6 bytes. These Diagnosis bytes can also be monitored via cyclic tools.

				From Physical Block	
Len of status bytes	Status Type	Physical Block Slot	Status Appears Disappears	Standard Diagnostic	Extended Diagnostic
08 - Standard Diag 0E - Ext Diag	FE	01	01 - Appears 02- Disappears	4 bytes	6 bytes vendor specific

When bit 55 (byte 4, MSB) is "1":
the device has extended diagnostic

Figure 3.47 – Cyclical Diagnosis

Diagnosis

	Byte 1								Byte 2							
Bit	7	6	5	4	3	2	1	0	7	6	5	4	3	2	1	0
Unit_Diag_Bit	31	30	29	28	27	26	25	24	39	38	37	36	35	34	33	32
	Byte 3								Byte 4							
Bit	7	6	5	4	3	2	1	0	7	6	5	4	3	2	1	0
Unit_Diag_Bit	47	46	45	44	43	42	41	40	55	54	53	52	51	50	49	48

When bit 55 is "1", the device has extended diagnostic.

Figure 3.48 – Cyclic Diagnosis mapping for 4 bytes of Physical Block.

Unit_Diag_bit is described in the GSD file Profibus-PA device.

See below a description part of a GSD file for the 4 bytes and more detail:

```
;----------- Description of device related diagnosis: ---------------------
;

Unit_Diag_Bit(16)   = "Error appears"
Unit_Diag_Bit(17)   = "Error disappears"
;
;Byte 01
Unit_Diag_Bit(24)   = "Hardware failure electronics"
Unit_Diag_Bit(25)   = "Hardware failure mechanics"
Unit_Diag_Bit(26)   = "Not used 26"
Unit_Diag_Bit(27)   = "Electronic temperature alarm"
Unit_Diag_Bit(28)   = "Memory error"
Unit_Diag_Bit(29)   = "Measurement failure"
Unit_Diag_Bit(30)   = "Device not initialized"
Unit_Diag_Bit(31)   = "Device initialization failed"

;Byte 02
Unit_Diag_Bit(32)   = "Not used 32"
Unit_Diag_Bit(33)   = "Not used 33"
Unit_Diag_Bit(34)   = "Configuration invalid"
Unit_Diag_Bit(35)   = "Restart"
Unit_Diag_Bit(36)   = "Coldstart"
```

```
Unit_Diag_Bit(37)   = "Maintenance required"
Unit_Diag_Bit(38)   = "Characteristics invalid"
Unit_Diag_Bit(39)   = "Ident_Number violation"


;Byte 03
Unit_Diag_Bit(40)   = "Not used 40"
Unit_Diag_Bit(41)   = "Not used 41"
Unit_Diag_Bit(42)   = "Not used 42"
Unit_Diag_Bit(43)   = "Not used 43"
Unit_Diag_Bit(44)   = "Not used 44"
Unit_Diag_Bit(45)   = "Not used 45"
Unit_Diag_Bit(46)   = "Not used 46"
Unit_Diag_Bit(47)   = "Not used 47"


;byte 04
Unit_Diag_Bit(48)   = "Not used 48"
Unit_Diag_Bit(49)   = "Not used 49"
Unit_Diag_Bit(50)   = "Not used 50"
Unit_Diag_Bit(51)   = "Not used 51"
Unit_Diag_Bit(52)   = "Not used 52"
Unit_Diag_Bit(53)   = "Not used 53"
Unit_Diag_Bit(54)   = "Not used 54"
Unit_Diag_Bit(55)   = "Extension Available"

;Byte 05 TRD Block & PHY Block
Unit_Diag_Bit(56)   = "Sensor failure"
Unit_Diag_Bit(57)   = "Temperature Out of work range"
Unit_Diag_Bit(58)   = "Pressure Sensor Out of High limit"
Unit_Diag_Bit(59)   = "Pressure Sensor Out of Low limit"
Unit_Diag_Bit(60)   = "Calibration Error - Check XD_ERROR parameter"
Unit_Diag_Bit(61)   = "Primary Value Unit not valid"
Unit_Diag_Bit(62)   = "No valid polynomial version"
Unit_Diag_Bit(63)   = "Device is writing lock"

;byte 06 AI Block
Unit_Diag_Bit(64)   = "Simulation Active in AI Block"
Unit_Diag_Bit(65)   = "Fail Safe Active in AI Block"
Unit_Diag_Bit(66)   = "AI Block in Out of Service"
Unit_Diag_Bit(67)   = "AI Block Output out of High limit"
Unit_Diag_Bit(68)   = "AI Block Output out of Low limit"
Unit_Diag_Bit(69)   = "No assigned channel to AI Block"
Unit_Diag_Bit(70)   = "Not used 70"
Unit_Diag_Bit(71)   = "Not used 71"

;byte 07 TOT Block
Unit_Diag_Bit(72)   = "TOT Block in Out of Service"
Unit_Diag_Bit(73)   = "Totalization Out of High limit"
Unit_Diag_Bit(74)   = "Totalization Out of Low limit"
Unit_Diag_Bit(75)   = "No assigned channel to TOT Block"
Unit_Diag_Bit(76)   = "Not used 76"
Unit_Diag_Bit(77)   = "Not used 77"
Unit_Diag_Bit(78)   = "Not used 78"
Unit_Diag_Bit(79)   = "Not used 79"

;byte 08
Unit_Diag_Bit(80)   = "Not used 80"
Unit_Diag_Bit(81)   = "Not used 81"
Unit_Diag_Bit(82)   = "Not used 82"
Unit_Diag_Bit(83)   = "Not used 83"
Unit_Diag_Bit(84)   = "Not used 84"
Unit_Diag_Bit(85)   = "Not used 85"
Unit_Diag_Bit(86)   = "Not used 86"
Unit_Diag_Bit(87)   = "Not used 87"
```

```
;byte 09
Unit_Diag_Bit(88)   = "Not used 88"
Unit_Diag_Bit(89)   = "Not used 89"
Unit_Diag_Bit(90)   = "Not used 90"
Unit_Diag_Bit(91)   = "Not used 91"
Unit_Diag_Bit(92)   = "Not used 92"
Unit_Diag_Bit(93)   = "Not used 93"
Unit_Diag_Bit(94)   = "Not used 94"
Unit_Diag_Bit(95)   = "Not used 95"

;byte 10
Unit_Diag_Bit(96)   = "Not used 96"
Unit_Diag_Bit(97)   = "Not used 97"
Unit_Diag_Bit(98)   = "Not used 98"
Unit_Diag_Bit(99)   = "Not used 99"
Unit_Diag_Bit(100)  = "Not used 100"
Unit_Diag_Bit(101)  = "Not used 101"
Unit_Diag_Bit(102)  = "Not used 102"
Unit_Diag_Bit(103)  = "Not used 103"
```

NOTE
If the FIX flag is active on LCD, the **LD303** is configured to "Profile Specific" mode. When in "Manufacturer Specific" mode, the Identifier Number is 0x0895. Once the Identifier_Number_Selector is changed from "Profile Specific" to "Manufacturer Specific" or vice-versa, one must wait 5 seconds while is saved. Then, turn the **LD303** off and turn it on again. So, the Identifier Number is updated to the communication level. If the equipment is in "Profile Specific" and using the GSD file Identifier Number equals 0x0895, the acyclic communication will work with the tools based on EDDL, FDT/DTM, but no cyclic communication with the Profibus-DP master.

MAINTENANCE PROCEDURES

General

NOTE
Equipments installed in hazardous atmospheres must be inspected in compliance with the IEC60079-17 standard.

SMAR Series 303 devices are extensively tested and inspected before delivery to the end user. Nevertheless, during their design and development, consideration was given to the possibility of repairs being made by the end user, if necessary.

In general, it is recommended that end users do not try repair printed circuit boards. Spare circuit boards may be ordered from **SMAR** whenever necessary. Refer to the item “Returning Materials” at the end of this Section.

SYMPTOM	PROBABLE SOURCE OF PROBLEM
NO COMMUNICATION	▪ **Transmitter Connections** Check wiring polarity and continuity. Check for shorts or ground loops. Check if the power supply connector is connected to main board. Check if the shield is not used as a conductor. It should be grounded at one end only.
	▪ **Power Supply** Check power supply output. The voltage must be between 9 - 32 VDC at the **LD303** terminals. Noise and ripple should be within the following limits: a) 16 mV peak to peak from 7.8 to 39 KHz. b) 2 V peak to peak from 47 to 63 Hz for non-intrinsic safety applications and 0.2 V for intrinsic safety applications. c) 1.6 V peak to peak from 3.9 MHz to 125 MHz.
	▪ **Network Connection** Check that the topology is correct and all devices are connected in parallel. Check that two Terminators are OK and correctly positioned. Check that the coupler connections are OK and correctly positioned. Check that the Terminators are according to the specifications. Check length of trunk and spurs. Check spacing between couplers.
	▪ **Network Configuration** Make sure that device address is configured correctly.
	▪ **Electronic Circuit Failure** Check the main board for defect by replacing it with a spare one.
INCORRECT READING	▪ **Transmitter Connections** Check for intermittent short circuits, open circuits and grounding problems. Check if the sensor is correctly connected to the **LD303** terminal block.
	▪ **Noise, Oscillation** Adjust damping Check grounding of the transmitters housing. Check that the shielding of the wires between transmitter / panel is grounded only in one end.
	▪ **Sensor** Check the sensor operation; it shall be within its characteristics. Check sensor type; it shall be the type and standard that the **LD303** has been configured to. Check if process is within the range of the sensor and the **LD303**.

Table 4.1 - Messages of Errors and Potential Cause

If the problem is not presented in the table above follow the Note below:

NOTE
The Factory Init should be tried as a last option to recover the equipment control when the equipment presents some problem related to the function blocks or the communication. **This operation must only be carried out by authorized technical personnel and with the process offline, since the equipment will be configured with standard and factory data.** This procedure resets all the configurations run on the equipment, after which a partial download should be performed. With exception to the equipment physical address and the GSD identifier number selector parameter. After doing this, all configurations must be remade according to their applications. Two magnetic tools should be used to this effect. On the equipment, withdraw the nut that fixes the identification tag on the top of the housing, so that access is gained to the "S" and "Z" holes. The operations to follow are: 1) Switch off the equipment, insert the magnetic tools and keep them in the holes (the magnetic end in the holes); 2) Feed the equipment; 3) As soon as Factory Init is shown on the display, take off the tools and wait for the "5" symbol on the right upper corner of the display to unlit, thus indicating the end of the operation. This procedure makes effective all the factory configuration and will eliminate eventual problems with the function blocks or with the equipment communication. Note that this procedure must be performed by authorized personal only and with the process switched off, since the equipment will be configured with standard and factory data.

Disassembly Procedure

WARNING
Do not disassemble with power on.

The Figure 4.4 – Exploded View an exploded view of the transmitter and will help to visualize the following:

Sensor Cleaning

In order to have access to the sensor (**19**) for cleaning purposes, the transmitter should be removed from its process connections. The transmitter should be isolated from the process by means of manifolds or valves; then, the drain (**13**) must be opened to vent any remaining pressure.

Figure 4.1 - Sensor Safety Rotation

After this, the transmitter may be removed from the standpipe. The flange bolts (**16**) may now be loosened crosswise, one at a time. After removing bolts and flanges (**15**), the isolating diaphragms will be easily accessible for cleaning.

Cleaning should be done carefully in order to avoid damaging the delicate isolating diaphragms. Use of a soft cloth and a non-acid solution is recommended. The oscillating circuit is a part of the sensor and the replacement of one implies replacing the other.

To remove the sensor from the electronic housing, the electrical connections (in the field terminal side) and the main board connector must be disconnected.

Loosen the hex screw (**20**) and carefully unscrew the electronic housing from the sensor, observing that the flat cable is not excessively twisted.

WARNING
To avoid damage do not rotate the electronic housing more than 270º starting from the fully threaded without disconnecting the electronic circuit from the sensor and from the power supply. See Figure 4.1.

Electronic Circuit

To remove the circuit board (**5**), loosen the two screws (**3**) that anchor the board.

WARNING
The board has CMOS components, which may be damaged by electrostatic discharges. Observe correct procedures for handling CMOS components. It is also recommended to store the circuit boards in electrostatic-proof cases.

Pull the main board out of the housing and disconnect the power supply and the sensor connectors.

Reassemble Procedure

WARNING
Do not assemble the main board with power on.

Sensor Mounting

When mounting the sensor (**19**), it is recommended to make use of a new set of gaskets (**18** & **24**) compatible with the process fluid. The bolts, nuts, flanges and other parts should be inspected for corrosion or other eventual damage. Damaged parts should be replaced.

NOTE
Backup Rings High pressure transmitters A5, M5, M6 and High static pressure transmitters H2, H3, H4, H5 and the sensors with tantalum diaphragm that use Buna-N or Viton O'Ring must use a metallic backup Ring (17) to prevent extrusion of O'Ring. Do not use the backup O'Ring when the flange has an insert of Kynar (PVDF). Avoid bending the backup ring and inspect it for knots, cuts etc. Be careful when mounting it. The flat side, which shines more than the bevelled side should be mounted against the O'Ring. (See Figure 4.2 - Backup Ring Mounting).

Gaskets should be lightly lubricated with silicone oil before they are fitted into their recesses. Use halogen grease for inert fill applications. The flanges should then be positioned in order to press them in place. With the flanges holding the O-Rings in place, insert the four bolts (**16**) and tighten the nuts (**23**) finger tight, making sure the flanges remain parallel all the time.

- Tighten one nut till the flange seats.
- Tighten the nut diagonally across with a torque of 2.75 ±0.25 kgf.m.
- Tighten the first nut with the same torque.
- Verify the flange alignment.
- Check torque on the four bolts.

If adapters (**25**) have been removed, it is recommended to replace gaskets (**24**) and to connect the adapters to the process flanges before coupling them to the sensor. Optimum torque is 2.75 ±0.25 Kgf.m.

The fitting of the sensor must be done with the main board out of the electronic housing. Mount the sensor to the housing turning clockwise until it stops. Then turn it counterclockwise until it faces the protective cover (**1**) parallel to the process flange. Tighten the hex screw (**20**) to lock the housing to the sensor.

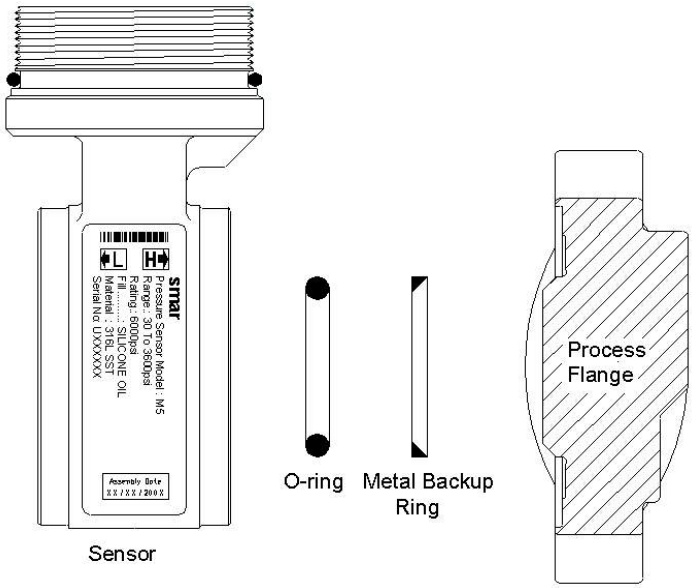

Figure 4.2 - Backup Ring Mounting

Electronic Circuit

Plug sensor connector and power supply connector to main board.

Attach the display to the main board. Observe the four possible mounting positions. (Figure 4.3 - Four Possible Positions of the Display). The **SMAR** mark indicates up position.

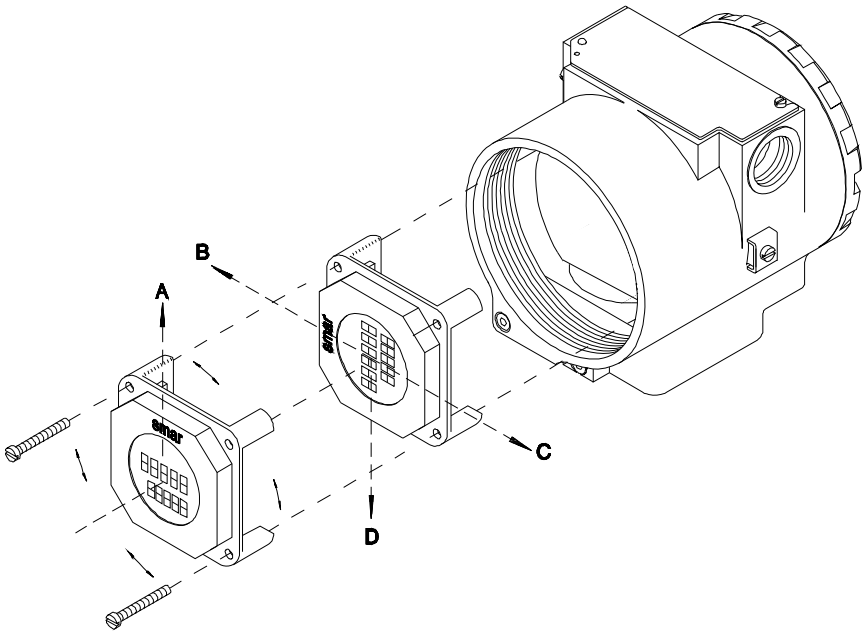

Figure 4.3 - Four Possible Positions of the Display

Anchor the main board and display with their screws (**3**).

After tightening the protective cover (**1**), mounting procedure is complete. The transmitter is ready to be energized and tested. It is recommended to open the transmitter's pressure taps to atmosphere and adjust the TRIM.

Interchangeability

In order to obtain an accurate and better temperature compensated response. Each sensor is submitted to a characterization process and the specific data is stored in an EEPROM located in the sensor body.

Every time the power is turned on, the main circuit reads the sensor serial number, should it differ from the number stored in the memory. The circuit understands that there is a new sensor and the following information is transferred from the sensor to the main circuit.

- Temperature compensation coefficients;
- Sensor's trim, including 5-point characterization curve;
- Sensor characteristics: type, range, diaphragm material and fill fluid.

The other transmitter characteristics are stored in the main circuit memory and are not affected by sensor change.

Upgrading LD301 to LD303

The sensor and casing of the LD301 is exactly the same as the **LD303**. By changing the circuit board of the LD301 it becomes a **LD303**. The display on LD301 version 5.XX is the same as on **LD303** and can therefore be used with the **LD303** upgrade circuit board. With a LD301 version three or earlier, that display can not be used.

Upgrading the LD301 to a **LD303** is therefore very much the same as the procedure for replacing the main board described above.

To remove the circuit board (**5**), loosen the two screws (**3**) that anchor the board.

Caution with the circuit boards must be taken as mentioned above.

Pull the LD301 main board out of the housing and disconnect the power supply and the sensor connectors.

Put in the **LD303** main board reversing the procedure for removing the LD301 circuit.

Returning Materials

Should it become necessary to return the transmitter and/or configurator to **SMAR**, simply contact our office, informing the defective instrument serial number, and return it to our factory.

If it becomes necessary to return the transmitter and/or configurator to Smar, simply contact our office, informing the defective instrument's serial number, and return it to our factory. In order to speed up analysis and solution of the problem, the defective item should be returned with the Service Request Form (SRF – Appendix B) properly filled with a description of the failure observed and with as much details as possible. Other information concerning to the instrument operation, such as service and process conditions, is also helpful.

Instruments returned or to be revised outside the guarantee term should be accompanied by a purchase order or a quote request.

ACCESSORIES	
ORDERING CODE	**DESCRIPTION**
SD1	Magnetic Tool for Local Adjustment
BC1	Profibus/RS232 Interface
PS302	Power Supply
FDI302	Field Device Interface
BT302	Terminator
DF47	Intrinsic Safety Barrier
DF48	Profibus Repeater

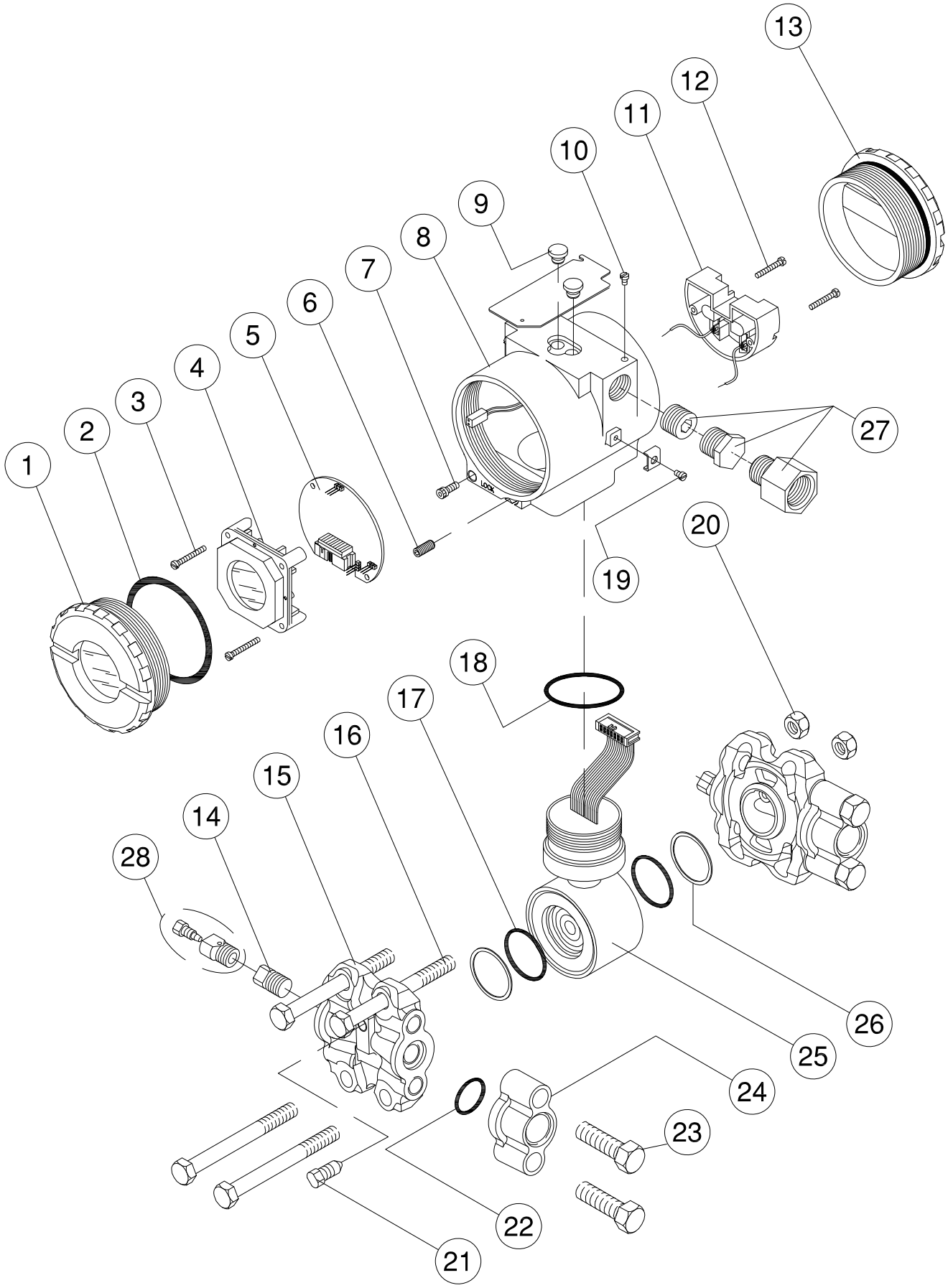

Figure 4.4 - Exploded View

SPARE PARTS LIST			
DESCRIPTION OF PARTS	**POSITION**	**CODE**	**CATEGORY (NOTE 1)**
HOUSING, Aluminum (NOTE 2)			
½ - 14 NPT	8	400-0291	
M20 x 1.5	8	400-0292	
PG 13.5 DIN	8	400-0293	
HOUSING, 316 SS (NOTE 2)			
½ - 14 NPT	8	400-0294	
M20 x 1.5	8	400-0295	
PG 13.5 DIN	8	400-0296	
COVER (INCLUDES O'RING)			
Aluminum	1 and 13	204-0102	
316 SS	1 and 13	204-0105	
COVER WITH WINDOW FOR INDICATION (INCLUDES O'RING)			
Aluminum	1	204-0103	
316 SS	1	204-0106	
COVER LOCKING SCREW	7	204-0120	
SENSOR LOCKING SCREW			
Without Head M6 Screw	7	400-1121	
EXTERNAL GROUND SCREW	22	204-0124	
IDENTIFICATION PLATE FIXING SCREW	10	204-0116	
DIGITAL INDICATOR	4	214-0108	
TERMINAL INSULATOR	11	400-0059	
MAIN ELECTRONIC CIRCUIT BOARD	5	400-0297	A
FLANGE (WITH HOLE FOR DRAIN/VENT)			
Plated Carbon Steel	15	204-0501	
Stainless Steel 316	15	204-0502	
Hastelloy C276	15	204-0503	
Monel 400	15	204-0504	
FLANGE (WITHOUT HOLE FOR DRAIN/VENT)			
Plated Carbon Steel	15	204-0511	
Stainless Steel 316	15	204-0512	
Hastelloy C276	15	204-0513	
Monel 400	15	204-0514	
BLANK FLANGE (FOR GAGE AND ABSOLUTE MODELS)			
Plated Carbon Steel	15	204-1101	
Stainless Steel 316	15	204-1102	
ADAPTER			
Plated Carbon Steel	24	203-0601	
Stainless Steel 316	24	203-0602	
Hastelloy C276	24	203-0603	
Monel 400	24	203-0604	
O'RINGS (NOTE 3)			
Cover, Buna-N	2	204-0122	B
Neck, Buna-N	21	204-0113	B

SPARE PARTS LIST			
DESCRIPTION OF PARTS	POSITION	CODE	CATEGORY (NOTE 1)
O'RINGS (NOTE 3)			
Flange, BUNA-N	17	203-0401	B
Flange, VITON	17	203-0402	B
Flange, TEFLON	17	203-0403	B
Flange, ETHYLENE/PROPYLENE	17	203-0404	B
Flange, TEFLON with spring LOADED **(NOTE 6)**	17	203-0405	B
Adapter, BUNA-N	22	203-0701	B
Adapter, VITON	22	203-0702	B
Adapter, TEFLON	22	203-0703	B
Adapter, ETHYLENE/PROPYLENE	22	203-0704	B
TERMINAL HOLDING SCREW			
Housing in Aluminum	12	304-0119	
Housing in 316 Stainless Steel	12	204-0119	
MAIN BOARD SCREW HOUSING IN ALUMINUM			
Units with indicator	3	304-0118	
Units without indicator	3	304-0117	
MAIN BOARD SCREW HOUSING IN 316 STAINLESS STEEL			
Units with indicator	3	204-0118	
Units without indicator	3	204-0117	
FLANGE BOLT			
Carbon Steel	16	203-0300	
Stainless Steel 316	16	203-0310	
FLANGE NUT			
Carbon Steel	20	203-0302	
Stainless Steel 316	20	203-0312	
ADAPTER BOLT			
Carbon Steel	23	203-0350	
Stainless Steel 316	23	203-0351	
DRAIN/VENT SCREW			
Stainless Steel 316	21	203-1401	A
Hastelloy C276	21	203-1402	A
Monel 400	21	203-1403	A
FLANGE PLUG (STOPPER)A			
Stainless Steel 316	14	203-0552	
Hastelloy C276	14	203-0553	
Monel 400	14	203-0554	
MOUNTING BRACKET FOR 2" PIPE MOUNTING (NOTE 5)			
Carbon Steel	-	203-0801	
Stainless Steel 316	-	203-0802	
Carbon Steel with bolts, nuts, washers and U-clamp in 316SS	-	203-0803	
LOCAL ADJUSTMENT PROTECTION CAP	9	204-0114	
SENSOR	25	(**NOTE 4**)	B

SPARE PARTS LIST			
DESCRIPTION OF PARTS	**POSITION**	**CODE**	**CATEGORY (NOTE 1)**
DRAIN/VENT VALVE			
316 SST	28	400-0792	
PLUG			
1/2 NPT Internal Hexagon Plug in Plated CS (Ex d)	27	400-0808	
1/2 NPT Internal Hexagon Plug in 304 SST (Ex d)	27	400-0809	
M20 X 1.5 External Hexagon Plug in 316 SST (Ex d)	27	400-0810	
PG 13.5 External Hexagon Plug in 316 SST (Ex d)	27	400-0811	
1/2 NPT Internal Socket Set Plug in Plated CS	27	400-0583-11	
1/2 NPT Internal Socket Set Plug in 304 SST	27	400-0583-12	
ADAPTER FOR ELECTRIC CONNECTION			
3/4 NPT female for 1/2 NPT male, SST 316	-	400-0812	

Table 4.2 - Spare Part List

NOTES
1 - For category A, it is recommended to keep, in stock, 25 parts installed for each set, and for category B, 50.
2 - Includes Terminal Block, Bolts, caps and Identification plate without certification.
3 - O'Rings and Backup Rings are packaged in packs of 12 units.
4 - To specify sensors, use the following tables.
5 - Including U-clamp, nuts, bolts and washers.
6 - For this type, O'Ring pack has 1 piece.

Smar Insulator Kit

The Insulator Kit Smar prevents the generation of galvanic current between metals when in contact. The difference of potential between the metals generates this current that flows from the metal with higher potential to the other. This process in the presence of aqueous solution with salts, acids or bases can start the corrosion process, where the corroded metal is always the one with bigger potential (anode).

In the processes, when it is impossible to isolate the two potencialized metals, occurs the generation of galvanic current. This current will form free ions of hydrogen (H+) in one of the solutions, with tendency to start the corrosion and the migration of the Hydrogen to the diaphragm of the Remote Seal or of the Level Transmitter.

The figure 6.3 shows the following parts that constitute the Smar Insulator Kit: Teflon Gasket (**6**), Nonmetallic Insulating Sleeve (**4**), Mica Washers (**3**) and Steel Washers (**2**).

Smar Insulator Kit Mounting

Mounting step by step:

1 – Insert all the Nonmetallic Insulating Sleeve (**4**); in the holes of the Sealed Flange (**5**);
2 – Put the Teflon Gasket (6) between the Flanges (**5** e **7**);
3 – Insert the Steel Washers (**2**) and the Mica Washers (**3**) in the bolts (**1**)
4 – Join the Flanges positioning its holes (**5** and **7**);
5 – Introduce the bolts in the holes of the flanges (**5** and **7**) and tighten the flanges with the nuts (**8**)
6 – Measure the resistance between the Sealed Flange (**5**) and the Flange of Process (**7**) that should be tending to the infinite to check the efficiency of the Insulator Kit.

NOTE
If the studs are used instead of the bolts, obey the same mounting sequence for the items 2, 3 and 4. This Insulator Kit can be applied with raised and flat face flanges. The Gasket must be made of Teflon when the Smar Insulator Kit is indicated.

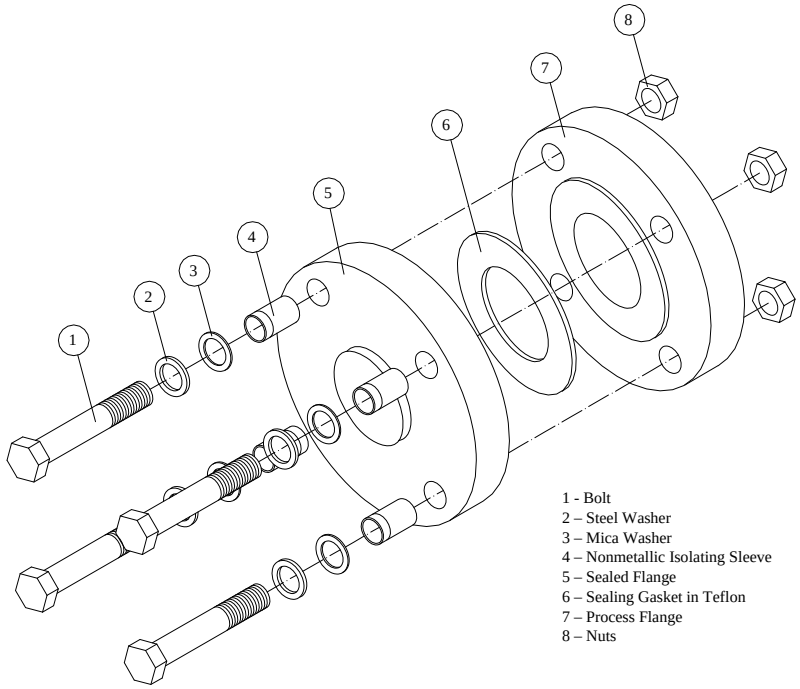

Figure 4.5 – Insulator Kit Mounting

INSULATOR KIT SPARE PARTS: LD300L				
ØN	GROUP	NORM	MODELS WITHOUT EXTENSION	MODELS WITH EXTENSION
			LD300L / SR301T	LD300L / SR301E
1”	150	ANSI B 16.5	400-0861-11X01	400-0861-11X11
	300		400-0861-12X01	400-0861-12X11
	600		400-0861-13X01	400-0861-13X11
1.1/2”	150		400-0861-21X01	400-0861-21X11
	300		400-0861-22X01	400-0861-22X11
	600		400-0861-23X01	400-0861-23X11
2”	150		400-0861-31X01	400-0861-31X11
	300		400-0861-32X01	400-0861-32X11
	600		400-0861-33X01	400-0861-33X11
3”	150		400-0861-41X01	400-0861-41X11
	300		400-0861-42X01	400-0861-42X11
	600		400-0861-43X01	400-0861-43X11
4”	150		400-0861-51X01	400-0861-51X11
	300		400-0861-52X01	400-0861-52X11
	600		400-0861-53X01	400-0861-53X11
DN25	PN10/40	DIN EN1092-1	400-0861-64X01	400-0861-64X11
DN40	PN10/40		400-0861-74X01	400-0861-74X11
DN50	PN10/40		400-0861-84X01	400-0861-84X11
DN80	PN10/40		400-0861-94X01	400-0861-94X11
DN100	PN16		400-0861-A8X01	400-0861-A8X11
	PN40		400-0861-A4X01	400-0861-A4X11
40A	20K	JIS B 2202	400-0861-B6X01	400-0861-B6X11
50A	10K		400-0861-C5X01	400-0861-C5X11
	40K		400-0861-C7X01	400-0861-C7X11
80A	10K		400-0861-D5X01	400-0861-D5X11
	20K		400-0861-D6X01	400-0861-D6X11
100A	10K		400-0861-E5X01	400-0861-E5X11

Table 4.3 – LD300L – Codes to the Spare parts of the Insulator Kit

See Figure 4.5.

SPARE PARTS: LD300L						
ØN	GROUP	NORM	GASKET			DRAIN VALVE
			TEFLON	COPPER	GRAFOIL	STAINLESS STEEL 316L
1”	ALL	ANSI-B16.5	400-0425	400-0426	400-0427	400-0792
1.1/2”	ALL		400-0428	400-0429	400-0430	
2”	ALL		400-0431	400-0432	400-0433	
3”	ALL		400-0434	400-0435	400-0436	
4”	ALL		400-0437	400-0438	400-0439	
DN25	ALL	EN 1092-1/2501	400-0440	400-0441	400-0442	
DN40	ALL		400-0443	400-0444	400-0445	
DN50	ALL		400-0446	400-0447	400-0448	
DN80	ALL		400-0449	400-0450	400-0451	
DN100	PN10/16		400-0452	400-0453	400-0454	
DN100	PN25/40		400-0455	400-0456	400-0457	

Table 4.4 – LD300L – Codes to the Spare parts of the Gasket

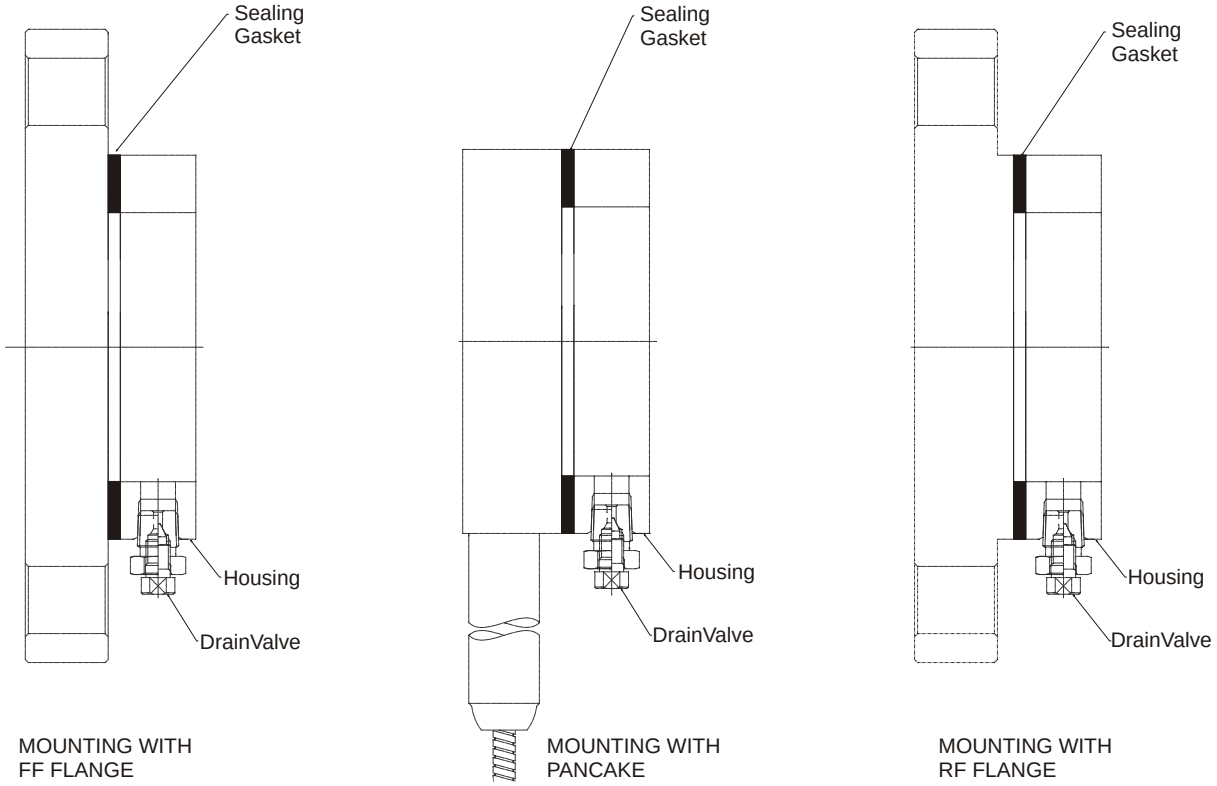

Figure 4.6 – LD300L- Sealing Gasket

RTJ SPARE PARTS: LD300L (without Extension)					
ØN	GROUP	NORM	RING	METALLIC RING	DRAIN VALVE
				STAINLESS STEEL 316L	STAINLESS STEEL 316L
1”	150	ANSI B 16.20 RTJ	R15	400-0887	400-0792
	300		R16	400-0888	
	600		R16	400-0888	
	1500		R16	400-0888	
	2500		R18	400-0889	
1.1/2”	150		R19	400-0890	
	300		R20	400-0891	
	600		R20	400-0891	
	1500		R20	400-0891	
	2500		R23	400-0893	
2”	150		R22	400-0892	
	300		R23	400-0893	
	600		R23	400-0893	
	1500		R24	400-0894	
	2500		R26	400-0895	
3”	150		R29	400-0896	
	300		R31	400-0897	
	600		R31	400-0897	
4”	150		R36	400-0900	
	300		R37	400-0901	
	600		R37	400-0901	

Table 4.5 – LD300L – Codes to the SST Metallic O-Ring

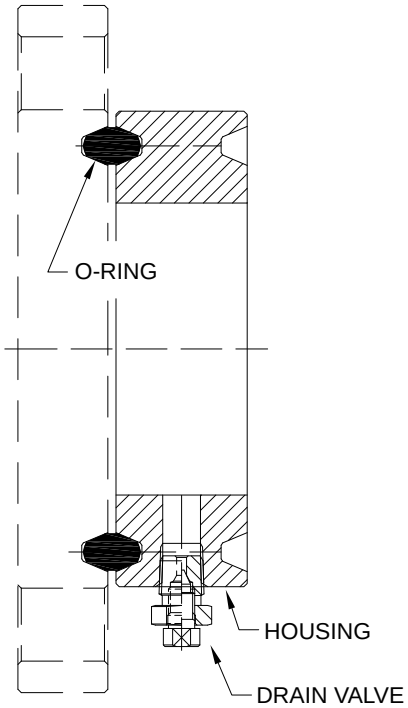

Figure 4.7 – SST Metallic O’Ring

ØN	CLASS	NORM	Ring	METALLIC RING
				316L SST
3”	1500	ANSI B 16.20 RTJ	R35	400-0899
	2500		R32	400-0898
4”	1500		R39	400-0903
	2500		R38	400-0902

Table 5.5 - LD300L – Special models for Gasket in Steel – Without Extension

Application with Halar

Technical Specification

Halar® is chemically one of the most resistant fluoropolymer. It is a thermoplastic of the melting process manufactured by Solvay Solexis, Inc. For its chemical structure, a 1:1 alternating ethylene copolymer and chlorinetrifluoroethylene, Halar® ***(ECTFE)*** offers an only combination of useful properties.

The diaphragms in 316L Stainless Steel covered with Halar®, are ideal for applications in contact with aggressive liquids. They offer excellent resistance to the chemic and abrasion with a wide temperature range. Halar® does not contaminate liquids of high purity and it is not affected by most of corrosive chemists, usually found in the industries, including strong minerals, oxidant acids, alkalis, liquid oxygen and some organic solvents.

Halar® is trademark of *Solvay Solexis, Inc*.

Performance Specification

For the performance specification see the equation below:

[1% SPAN x (URL/SPAN)] - Included temperature error*****

Diameters/Capillary Length:

- 2” ANSI B 16.5, DN 50 DIN, JIS 50 A, for seals up to 3 meters of capillary and level models (by inquiry).
- 3” ANSI B 16.5, DN 80 DIN, JIS 80 A, for seals up to 5 meters of capillary and level models.
- 4” ANSI B 16.5, DN 100 DIN, JIS 100 A, for seals up to 8 meters of capillary and level models.

*****Temperature Limits:
+10 to 100°C;
+101 to 150°C (by inquiry).

TPE – Total Probable Error (Software)

Software to calculate the assembly error of the Pressure Transmitters with the possible connections to the process.

TPE was developed to a fast and effective aid of the products related the pressure measurement. The users are the Applications Engineer and Commercial Areas. The customer can request a report of performance estimate to Smar.

This product allows doing simulations of possible assemblies, verifying important data as the error estimates of the response time, of capillary length analysis and mechanical resistance of diaphragms with temperature variation. See an example in the Figure 5.8.

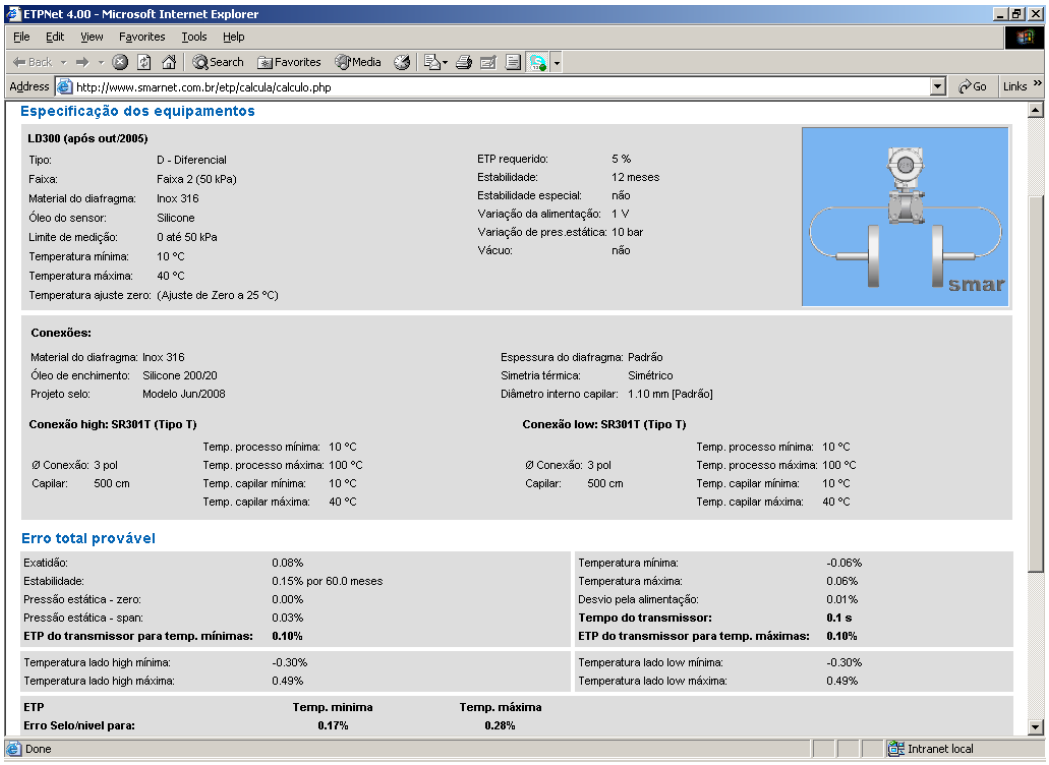

Figure 4.8 – TPE Software Screen

Ordering Code for the Sensor

204 – 0301 SENSOR FOR DIFFERENTIAL , FLOW, GAGE, ABSOLUTE AND HIGH STATIC PRESSURE TRANSMITTER

COD	Type	Range Limits Min.	Range Limits Max.	Min. Span	Unit	Range Limits Min.	Range Limits Max.	Min. Span	Unit
D0	Differential and Flow	-1	1	0.05	kPa	-4	4	0.2	inH_2O
D1	Differential and Flow	-5	5	0.13	kPa	-20	20	0.5	inH_2O
D2	Differential and Flow	-50	50	0.42	kPa	-200	200	1.67	inH_2O
D3	Differential and Flow	-250	250	2.08	kPa	-36	36	0.3	psi
D4	Differential and Flow	-2500	2500	20.83	kPa	-360	360	3	psi
M0	Gage	-1	1	0.05	kPa	-4	4	0.2	inH_2O
M1	Gage	- 5	5	0.13	kPa	-20	20	0.5	inH_2O
M2	Gage	- 50	50	0.42	kPa	-200	200	1.67	inH_2O
M3	Gage	-100	250	2.08	kPa	-14.50	36	0.3	psi
M4	Gage	-100	2500	20.83	kPa	-14.50	360	3	psi
M5	Gage	- 0.1	25	0.21	Mpa	-14.50	3600	30	psi
M6	Gage	- 0.1	40	0.33	Mpa	-14.50	5800	48.3	psi
A1	Absolute	0	5	2.00	kPa	0	37	14.8	mmHga
A2	Absolute	0	50	2.50	kPa	0	7.2	0.36	psia
A3	Absolute	0	250	5.00	kPa	0	36	0.73	psia
A4	Absolute	0	2500	20.83	kPa	0	360	3	psia
A5	Absolute	0	25	0.21	Mpa	0	3600	30	psia
A6	Absolute	0	40	0.33	Mpa	0	5800	48.3	psia
H2	Differential – High Static Pressure	-50	50	0.42	kPa	-200	200	1.67	inH_2O
H3	Differential – High Static Pressure	-250	250	2.08	kPa	-36	36	0.3	psi
H4	Differential – High Static Pressure	-2500	2500	20.83	kPa	-360	360	3	psi
H5	Differential – High Static Pressure	-25	25	0.21	Mpa	-3600	-3600	30	psi

NOTE: The range can be extended up to 0.75 LRL* and 1.2 URL* with small degradation of accuracy.

*LRL = Lower Range Limit.
*URL = Upper Range Limit.

COD.	Diaphragm Material and Fill Fluid								
1	316 SST	Silicone Oil **(4)**	8	Tantalum	Inert Oil Fluorolube **(2)(3)(5)**	K	Monel 400	Inert Oil Krytox **(1) (3) (5)**
2	316 SST	Inert Oil Fluorolube **(2) (5)**	9	316L SST	Fomblim Oil	M	Monel 400 Gold Plated	Silicone Oil **(1) (3) (4)**
3	Hastelloy C276	Silicone Oil **(1) (4)**	A	Monel 400	Fomblim Oil **(1) (3)**	P	Monel 400 Gold Plated	Inert Oil Krytox **(1) (3) (5)**
4	Hastelloy C276	Inert Oil Fluorolube **(1)(2)(5)**	D	316L SST	Inert Oil Krytox **(3) (5)**	Q	316 SST	Inert Oil Halocarbon 4.2 **(2) (3) (5)**
5	Monel 400	Silicone Oil **(1) (3) (4)**	E	Hastelloy C276	Inert Oil Krytox **(1) (3) (5)**	R	Hastelloy C276	Inert Oil Halocarbon 4.2 **(2) (3) (5)**
7	Tantalum	Silicone Oil **(3) (4)**	G	Tantalum	Inert Oil Krytox **(3) (5)**	S	Tantalum	Inert Oil Halocarbon 4.2 **(2) (3) (5)**

204 – 0301	D2	1

⬅ TYPICAL MODEL NUMBER

NOTES

(1) Meets NACE MR – 01 – 75/ISO 15156 recommendations.
(2) Not available for absolute models nor for vacuum applications.
(3) Not available for range 0 and 1.
(4) Silicone Oil is not recommended for oxygen (O_2) or Chlorine service.
(5) Inert Fluid: Oxygen Compatibility, safe for oxygen service.

204-0301 SENSOR FOR FLANGED PRESSURE TRANSMITTER

COD.	Range Limits Min.	Range Limits Max.	Min. Span	Unit	Range limits Min.	Range limits Max.	Min. Span	Unit
L2	-50	50	1.25	kPa	-200	200	5	inH_2O
L3	-250	250	2.08	kPa	-36	36	0.3	psi
L4	-2500	2500	20.83	kPa	-360	360	3	psi
L5	-25000	25000	208.3	kPa	-3625	3625	30.2	psi

Note: The range can be extended up to 0.75 LRL and 1.2 URL with small degradation of accuracy. The upper range value must be limited to the flange rating.

COD. Diaphragm material and Fill Fluid (Low Side)

COD.		
1	316L SST	Silicone Oil **(2)**
2	316L SST	Inert Oil Fluorolube **(3) (15)**
3	Hastelloy C276	Silicone Oil **(1) (2)**
4	Hastelloy C276	Inert Oil Fluorolube**(1)(3)(15)**
5	Monel 400	Silicone Oil **(1) (2)**
7	Tantalum	Silicone Oil **(2)**
8	Tantalum	Inert Oil Fluorolube **(3) (15)**
9	316L SST	Fomblim Oil
A	Monel 400	Fomblim Oil **(1)**
D	316L SST	Inert Oil Krytox **(15)**
E	Hastelloy C276	Inert Oil Krytox **(1) (15)**
G	Tantalum	Inert Oil Krytox **(15)**
K	Monel 400	Inert Oil Krytox **(1) (15)**
M	Monel 400 Gold Plated	Silicone Oil **(1) (2)**
P	Monel 400 Gold Plated	Inert Oil Krytox **(1) (15)**
Q	316L SST	Inert Oil Halocarbon 4.2 **(15)**
R	Hastelloy C276	Inert Oil Halocarbon 4.2 **(1) (15)**
S	Tantalum	Inert Oil Halocarbon 4.2 **(15)**

COD. Flange, Adapter and Drain/Vent Valves material (Low Side)

COD.	
A	304L SST
C	Plated CS (Drain/Vent in Stainless Steel) **(16)**
H	Hastelloy C276 (CW – 12MW, ASTM – A494) **(1)**
I	316 SST – CF8M (ASTM – A351)
M	Monel 400 **(1)**
N	316 SST – CF8M (ASTM – A351) (Drain/Vent in Hastelloy C276) **(1)**
P	316 SST – CF8M (ASTM – A351) Flange with PVDF (Kynar) insert **(3) (4) (5)**

COD. Wetted O'Ring Material (Low Side)

COD.	
0	Without O'Rings
B	Buna N
E	Ethylene – Propylene
K	Kalrez
T	Teflon
V	Viton

Note: O'rings are not available on the sides with remote seals.

COD Drain/Vent Position (Low Side)

COD	
0	Without Drain/Vent
A	Drain/Vent (Opposite to Process Connection)
D	Bottom
U	Top

Note: For better Drain/Vent operation, vent valves are strongly recommended. Drain/Vent valve not available on the sides with remote seals.

COD. Process Connection (Low Side)

COD.	
0	¼ - 18 NPT (Without Adapter)
1	1/2 - 14 NPT (Without Adapter)
3	Remote Seal (With Plug) **(7)**
5	1/2 - 14 NPT Axial with PVDF Insert **(3) (4) (6)**
9	Remote Seal (Low Volume Flange) **(3) (7)**
T	1/2 14 BSP (With Adapter)
U	Low Volume Flange For Level Welded
V	Without Connection (Mounting With Gage Flange)
W	Without Connection (Absolut Reference)

COD. Process Connection (Level Tap)

COD.					
U	1" 150 # (ANSI B16.5) **(18)**	C	3" 600 # (ANSI B16.5)	S	JIS 40A 20K **(17)**
V	1" 300 # (ANSI B16.5) **(18)**	N	3" 600 # (ANSI B16.5 RTJ)	F	JIS 50A 10K **(17)**
W	1" 600 # (ANSI B16.5) **(18)**	3	4" 150 # (ANSI B16.5)	T	JIS 50A 40K **(17)**
O	1.1/2" 150 # (ANSI B16.5)	4	4" 300 # (ANSI B16.5)	K	JIS 50A 20K **(17)**
P	1.1/2" 300 # (ANSI B16.5)	D	4" 600 # (ANSI B16.5)	G	JIS 80A 10K **(17)**
Q	1.1/2" 600 # (ANSI B16.5)	5	DN 25 PN 10/40 **(18)**	L	JIS 80A 20K **(17)**
9	2" 150 # (ANSI B16.5)	R	DN 40 PN 10/40	H	JIS 100A 10K **(17)**
A	2" 300 # (ANSI B16.5)	E	DN 50 PN 10/40	M	JIS 100A 10K **(17)**
B	2" 600 # (ANSI B16.5)	6	DN 80 PN 10/40	Z	User's specification
1	3" 150 # (ANSI B16.5)	7	DN 100 PN 10/16		
2	3" 300 # (ANSI B16.5)	8	DN 100 PN 25/40		

COD. Type and Flange Material (Level Tap)

COD.					
2	316 SST (Integral Flange)	4	304 SST (Slip-on Flange)	6	Carbon Steel (Slip-on Flange)
3	Hastelloy C276 (Integral Flange)	5	316 SST (Slip-on Flange)	Z	User's specification

COD. Extension Length

COD.			
0	0 mm (0")	3	150 mm (6")
1	50 mm (2")	4	200 mm (8")
2	100 mm (4")	Z	User's specification

Note: Extension Material 316 SST

COD. Diaphragm Material / Extension (Level Tap)

COD.			
A	304L SST / 304L SST	6	316L SST with Teflon Lining (For 2"and 3")
1	316L SST / 316 SST	7	316L SST Gold Plated
2	Hastelloy C276 / 316 SST	B	Tantalum with Teflon Lining
3	Monel 400 / 316 SST	L	316L SST Halar Plated **(14)**
4	Tantalum / 316 SST **(9)**	C	Hastelloy Teflon Plated
5	Titanium / 316 SST **(9)**		

COD. Fill Fluid

COD.			
1	DC – 200/20 Silicone Oil	G	Glycerin + water **(11)**
3	DC704 Silicone Oil	B	Fomblim 06/06
2	MO – 10 Fluorolube Oil **(8)**	H	Halocarbon 4.2
4	Krytox Oil	T	Syltherm 800 Oil
N	Neobee M20 Propylene Glycol Oil		

COD. Housing Material

COD.	
0	Without Housing **(11)**
1	316 SST
2	Hastelloy C276
3	Super Duplex (UNS 32750) **(10)**
4	Duplex (UNS 31803) **(10)**
5	304L SST **(10)**

COD. Gasket Material

COD.	
0	Without Gasket
T	Teflon (PTFE)
G	Grafoil (Flexible lead)
C	Copper
I	316 L SST

204-0301	L2	1	I	B	U	0	1	2	2	1	1	1	T

TYPICAL MODEL NUMBER

204-0301 SENSOR FOR FLANGED PRESSURE TRANSMITTER (CONTINUATION)

CODE	Flanges Bolts and Nuts Material		
A0	Plated Carbon Steel (Default) **(16)**	A5	Hastelloy C276
A1	316 SST		
A2	Carbon Steel (ASTM A193 B7M) **(1) (16)**		

CODE	Flange thread for fixing accessories (adapters, manifolds, mounting brackets, etc)		
D0	7/16" UNF (Default)	D2	M12 X 1.75
D1	M10 X 1.5		

CODE	Flange Facing Finish
Q0	Raised Face – RF (Default)
Q1	Flat Face – FF
Q2	Ring Joint Face – RTJ (Only available for ANSI standard flange) **(12)**
Q3	Tongue Face **(11)**
Q4	Grooved Face **(11)**

204-0301	A0	D0	Q0

⬅ TYPICAL MODEL NUMBER

NOTES

(1) Meets NACE MR – 01 – 75/ISO 15156 recommendations.
(2) Silicone Oils not recommendations for Oxygen (O_2) or Chlorine service.
(3) Not applicable for vacuum service.
(4) Drain/Vent not applicable.
(5) O'Ring should be Viton or Kalrez.
(6) Maximum pressure 24 bar.
(7) For remote Seal only 316 SST - CF8M (ASTM A3510 flange is available (thread M12).
(8) Fluorolube fill fluid is not available for Monel diaphragm.
(9) Attention, check corrosion rate for the process, tantalum plate 0.1 mm, AISI 316L extension 3 to 6mm.
(10) Item by inquiry.
(11) Supplied without Gasket.
(12) Gasket for housing, available only in Stainless 316.
(13) Range of application of temperature from -40 ºC to 150 ºC.
(14) Applicable only to:
- Thickness of steel: 0.05 mm
- Diameter/capillary length:
  2" ANSI B 16.5 DN 50 DIN, JIS 50 A, for seals up to 3 meters of capillary and level models (by inquiry).
  3" ANSI B 16.5 DN 80 DIN, JIS 80 A, for seals up to 5 meters of capillary and level models.
- Faces: RF and FF;
- Temperature Range: +10 to 100 ºC
  + 101 to 150 ºC (by inquiry)
- Not applicable for diaphragm thickness;
- Not applicable for use with gaskets.

(15) Inert Fluid: safe for oxygen service.
(16) Not applicable for saline atmosphere.
(17) Not available for slip-on flange.
(18) Not available for integral flange.

204-0301 SENSOR FOR SANITARY PRESSURE TRANSMITTER

COD.	Range Limits Min.	Range Limits Max.	Min. Span	Unit	Range limits Min.	Range limits Max.	Min. Span	Unit
S2	-50	50	1.25	kPa	-200	200	5	inH_2O
S3	-250	250	2.08	kPa	-36	36	0.3	psi
S4	-2500	2500	20.83	kPa	-360	360	3	psi
S5	-25000	25000	208.3	kPa	-3625	3625	30.2	psi

Note: The range can be extended up to 0.75 LRL and 1.2 URL with small degradation of accuracy. The upper range value must be limited to the flange rating.

COD. Diaphragm Material and Fill Fluid (Low Side)

COD.		
1	316L SST	Silicone Oil **(2)**
2	316L SST	Inert Oil Fluorolube **(3) (12)**
3	Hastelloy C276	Silicone Oil **(1) (2)**
4	Hastelloy C276	Inert Oil Fluorolube**(1)(3)(12)**
5	Monel 400	Silicone Oil **(1) (2)**
7	Tantalum	Silicone Oil **(2)**
8	Tantalum	Inert Oil Fluorolube **(3) (12)**
9	316L SST	Fomblim Oil
A	Monel 400	Fomblim Oil **(1)**
D	316L SST	Inert Oil Krytox **(12)**
E	Hastelloy C276	Inert Oil Krytox **(1) (12)**
G	Tantalum	Inert Oil Krytox **(12)**
K	Monel 400	Inert Oil Krytox **(1) (12)**
M	Monel 400 Gold Plated	Silicone Oil **(1) (2)**
P	Monel 400 Gold Plated	Inert Oil Krytox **(1) (12)**
Q	316L SST	Inert Oil Halocarbon 4.2 **(12)**
R	Hastelloy C276	Inert Oil Halocarbon 4.2 **(1) (12)**
S	Tantalum	Inert Oil Halocarbon 4.2 **(12)**

COD. Flange, Adapter and Drain/Vent Valves Material (Low Side)

COD.	
C	Plated CS (Drain/Vent in Stainless Steel) **(13)**
H	Hastelloy C276 (CW – 12MW, ASTM – A494) **(1)**
I	316 SST – CF8M (ASTM – A351)
M	Monel 400 **(1)**
N	316 SST – CF8M (ASTM – A351) (Drain/Vent in Hastelloy C276) **(1)**
P	316 SST – CF8M (ASTM – A351) Flange with PVDF (Kynar) insert **(3) (4) (5)**

COD. Wetted O'Ring Material (Low Side)

COD.	
0	Without O'Rings
B	Buna N
E	Ethylene – Propylene
K	Kalrez
T	Teflon
V	Viton

Note: O'rings are not available on the sides with remote seals.

COD Drain/Vent Position (Low Side)

COD	
0	Without Drain/Vent
A	Drain/Vent (Opposite to Process Connection)
D	Bottom
U	Top

Note: For better Drain/Vent operation, vent valves are strongly recommended. Drain/Vent valve not available on the sides with remote seals.

COD. Process Connection (Low Side)

COD.	
0	¼ - 18 NPT (Without Adapter)
1	1/2 - 14 NPT (Without Adapter)
3	Remote Seal (With Plug) **(7)**
5	1/2 - 14 NPT Axial with PVDF Insert **(3) (4) (6)**
9	Remote Seal (Low Volume Flange) **(3) (7)**
T	1/2 14 BSP (With Adapter)
U	Low Volume Flange For Level Welded
V	Without Connection (Mounting With Gage Flange)
W	Without Connection (Absolut Reference)

COD. Process Connection (Level tap)

COD.	
8	Threaded DN25 DIN 11851 – with extension / 316L SST **(9)(10)**
9	Threaded DN40 DIN 11851 - with extension / 316L SST **(9)(10)**
H	Threaded DN40 DIN 11851 – without extension / 316L SST **(9)**
V	Threaded DN50 DIN 11851 - with extension / 316L SST **(9)(10)**
U	Threaded DN50 DIN 11851 - without extension / 316L SST **(9)**
X	Threaded DN80 DIN 11851 - with extension / 316L SST **(9)(10)**
W	Threaded DN80 DIN 11851 - without extension / 316L SST **(9)**
4	Threaded IDF 2" - with extension / 316L SST **(9) (10)**
B	Threaded IDF 2" – without extension / 316L SST **(9) (10)**
K	Threaded IDF 3" - with extension / 316L SST **(9) (10)**
3	Threaded IDF 3" - without extension / 316L SST **(9) (10)**
5	Threaded RJT 2" - with extension / 316L SST **(9) (10)**
C	Threaded RJT 2" - without extension / 316L SST **(9)**
L	Threaded RJT 3" - with extension / 316L SST **(9) (10)**
2	Threaded RTJ 3" - without extension / 316L SST **(9)**
S	Threaded SMS 1 1/2" – without extension / 316L SST **(9) (10)**
7	Threaded SMS 2" - with extension / 316L SST **(9) (10)**
E	Threaded SMS 2" – without extension / 316L SST **(9) (10)**
M	Threaded SMS 3" - with extension / 316L SST **(9) (10)**
1	Threaded SMS 3" - without extension / 316L SST **(9) (10)**
F	Tri-Clamp 1 1/2" – without extension / 316L SST **(10)**
Q	Tri-Clamp 1 1/2" HP (High Pressure) - without extension / 316L SST n **(8) (10)**
6	Tri-Clamp 2" - with extension / 316L SST **(10)**
D	Tri-Clamp 2" – without extension / 316L SST **(10)**
N	Tri-Clamp 2" HP (High Pressure) - with extension / 316L SST **(8) (10)**
P	Tri-Clamp 2" HP (High Pressure) – without extension / 316L SST **(8) (10)**
I	Tri-Clamp 3" - with extension / 316L SST **(10)**
G	Tri-Clamp 3" – without extension / 316L SST **(10)**
J	Tri-Clamp 3" HP (High Pressure) - with extension / 316L SST **(8) (10)**
R	Tri-Clamp 3" HP (High Pressure) – without extension o **(8) (10)**
Z	User's specification

COD Diaphragm Material (Level Tap)

COD	
1	316L SST
2	Hastelloy C276
3	Monel 400
4	Tantalum **(11)**
5	Titanium **(11)**
6	316L SST with Teflon Lining (For 2"and 3")
7	316L SST Gold Plated
B	Tantalum with Teflon Lining
L	316L SST Halar Plated **(20)**
C	Hastelloy Teflon Plated

COD. Fill Fluid

COD.	
1	DC – 200/20 Silicone Oil
3	DC704 Silicone Oil
2	MO – 10 Fluorolube Oil **(8)**
4	Krytox Oil
N	Neobee M20 Propylene Glycol Oil **(10)**
G	Glycerin + water **(11)**
B	Fomblim 06/06
H	Halocarbon 4.2
T	Syltherm 800 Oil

204-0301	L2	1	I	B	U	0	1	2	2

⬅ TYPICAL MODEL NUMBER

204-0301	SENSOR FOR SANITARY PRESSURE TRANSMITTER (CONTINUATION)		
	CODE	**Flanges Bolts and Nuts Material**	
	A0	Plated Carbon Steel (Default) **13)**	
	A1	316 SST	**A5** Hastelloy C276
	A2	Carbon Steel (ASTM A193 B7M) **(1) (13)**	
	CODE	**Flange thread for fixing accessories (adapters, manifolds, mounting brackets, etc)**	
	D0	7/16" UNF (Default)	**D2** M12 X 1.75
	D1	M10 X 1.5	

204-0301	A0	D0

⬅ TYPICAL MODEL NUMBER

NOTES

(1) Meets NACE MR – 01 – 75/ISO 15156 recommendations.
(2) Silicone Oils not recommendations for Oxygen (O_2) or Chlorine service.
(3) Not applicable for vacuum service.
(4) Drain/Vent not applicable.
(5) O'Ring should be Viton or Kalrez.
(6) Maximum pressure 24 bar.
(7) For remote Seal only 316 SST - CF8M (ASTM A3510 flange is available (thread M12).
(8) HP – High Pressure
(9) Not available for tri-clamp connections.
(10) Compliant with 3A-7403 standard for food and other applications where sanitary connections are required.:
- Neobee M2O Fill Fluid
- Finishing wet Face: 0,8 µm Ra (32 µ" AA)
- Wet O-Ring: Viton, Buna-N and Teflon

(11) Item by inquire.
(12) Inert Fluid: Oxygen Compatibility, safe for oxygen service.
(13) Not applicable for saline atmosphere.

TECHNICAL CHARACTERISTIC

Functional Specifications	
Process Fluid	Liquid, gas or vapor.
Output	Digital only. Complies with IEC 61158-2 (H1): 31.25kbit/s voltage mode, bus powered.
Power Supply	Bus powered: 9 – 32 Vdc. Quiescent current consumption: 12 mA
Indicator	4 1/2 -digit numerical and 5-character alphanumerical LCD indicator (optional).
Hazardous Area Certifications	Explosion proof (FM, CSA, NEMKO, CEPEL), intrinsic safe (FM, CSA, NEMKO, EXAM, CEPEL, NEPSI), dust ignition proof and non-incendive (FM). FISCO Field Device Ex ia IIC T4 (FM, CSA, NEMKO, EXAM, CEPEL, NEPSI) FNICO Field Device Ex n1 IIC T4 (FM, CSA, NEMKO, EXAM, CEPEL)
European Directive Information	**Authorized representative in European Community** Smar Gmbh-Rheingaustrasse 9-55545 Bad Kreuzanach **PED Directive (97/23/EC) – Pressure Equipment Directive** This product is in compliance with the directive and it was designed and manufactured in accordance with sound engineering practice using several standards from ANSI, ASTM, DIN and JIS. **EMC Directive (2004/108/EC) - Eletromagnetic Compatibility** The EMC test was performed according to IEC standard: IEC61326-1:2006, IEC61326-2-3:2006, IEC61000-6-4:2006, IEC61000-6-2:2005. For use in environment only. Keep the shield insulated at the instrument side, connecting the other one to the ground if necessary to use shielded cable. **ATEX Directive (94/9/EC) – Equipment and protective systems intended for use in potentially explosive atmospheres** This product was certified according European Standards at NEMKO and EXAM (old DMT). The certified body for manufacturing quality assessment is EXAM (number 0158). **LVD Directive 2006/95/EC – Electrical Equipment designed for use within certain voltage limits** According the LVD directive Annex II the equipment under ATEX "Electrical equipment for use in an explosive atmosphere" directive are excluded from scope from this directive. The EC declarations of conformity for all applicable European directives for this product can be found at **www.smar.com.**
Zero and Span Adjustments	No interactive, via digital communication.
Failure Alarm (Diagnostics)	For sensor or circuit failures, status is sent to output parameters. Detailed diagnostics are available in the contained parameters.
Temperature Limits	Ambient: -40 to 85 °C (-40 to 185 °F) Process: -40 to 100 °C (-40 to 212 °F) (Silicone oil) 0 to 85 °C (32 to 185 °F) (Halocarbon and Fluorolube oil) -20 to 85 °C (-4 to 185 °F) (Krytox oil and Fomblim oil) -25 to 85 °C (-13 to 185 °F) (Viton O-ring) Storage: -40 to 150 °C (-40 to 302 °F) (**LD303L**) Display: -40 to 100 °C (-40 to 212 °F) -20 to 80 °C (-4 to 176 °F) -40 to 85 °C (-40 to 185 °F) (Without damage)
Turn-on Time	Performs within specifications in less than 10 seconds after power is applied to the transmitter.
Configuration	Basic configuration may be done using the local adjustment magnetic tool if device is fitted with display. Complete configuration is possible using configuration tools.
Volumetric Displacement	Less than 0.15 cm^3 (0.01 in^3)
Overpressure and Static Pressure Limits (MWP – Maximum Working Pressure)	**From 3.45 kPa abs. (0.5 psia)* to:** 70 psi (5 bar) for range 0 1200 psi (80 bar) for range 1 2300 psi (160 bar) for ranges 2, 3 and 4 4600 psi (320 bar) for models H2 and H5 5800 psi (400 bar) for range 5 7500 psi (520 bar) for range 6 * ***except the LD301A model*** Flange Test Pressure: 68.95 MPa (10,000 psi) Overpressures above will not damage the transmitter, but a new calibration may be necessary. **WARNING** It is described here only the maximum pressures of the materials referenced in each rule, it can not be manufactured on request. Temperatures above 150 ° C are not available in standard models.

Functional Specifications

PRESSURES TABLE FOR SEAL AND LEVEL FLANGES DIN EN 1092-1 2008 STANDARD

Material Group	Pressure Class	Maximum Temperature Allowed						
		RT	100	150	200	250	300	350
		Maximum Pressure Allowed (bar)						
10E0 AISI 304/304L	PN 16	16	13.7	12.3	11.2	10.4	9,6	9.2
	PN 25	25	21.5	19.2	17.5	16.3	15.1	14.4
	PN 40	40	34.4	30.8	28	26	24.1	23
	PN 63	63	63	57.3	53.1	50.1	46.8	45
	PN 100	100	86.1	77.1	70	65.2	60.4	57.6
	PN 160	160	137.9	123.4	112	104.3	96.7	92.1
	PN 250	250	215.4	192.8	175	163	151.1	144

Material Group	Pressure Class	Maximum Temperature Allowed						
		RT	100	150	200	250	300	350
		Maximum Pressure Allowed (bar)						
14E0 AISI 316/316L	PN 16	16	16	14.5	13.4	12.7	11.8	11.4
	PN 25	25	25	22.7	21	19.8	18.5	17.8
	PN 40	40	40	36.3	33.7	31.8	29.7	28.5
	PN 63	63	63	57.3	53.1	50.1	46.8	45
	PN 100	100	100	90.9	84.2	79.5	74.2	71.4
	PN 160	160	160	145.5	134.8	127.2	118.8	114.2
	PN 250	250	250	227.3	210.7	198.8	185.7	178.5

Material Group	Pressure Class	Maximum Temperature Allowed						
		RT	100	150	200	250	300	350
		Maximum Pressure Allowed (bar)						
16E0 1.4410 Super Duplex 1.4462 Duplex	PN 16	16	16	16	16	16	-	-
	PN 25	25	25	25	25	25	-	-
	PN 40	40	40	40	40	40	-	-
	PN 63	63	63	63	63	63	-	-
	PN 100	100	100	100	100	100	-	-
	PN 160	160	160	160	160	160	-	-
	PN 250	250	250	250	250	250	-	-

PRESSURES TABLE FOR SEAL AND LEVEL FLANGES ASME B16.5 2009 STANDARD

Material Group	Pressure Class	Maximum Temperature Allowed								
		-29 to 38	50	100	150	200	250	300	325	350
		Maximum Pressure Allowed (bar)								
Hastelloy C276	150	20	19.5	17.7	15.8	13.8	12.1	10.2	9.3	8.4
	300	51.7	51.7	51.5	50.3	48.3	46.3	42.9	41.4	40.3
	400	68.9	68.9	68.7	66.8	64.5	61.7	57	55	53.6
	600	103.4	103.4	103	100.3	96.7	92.7	85.7	82.6	80.4
	900	155.1	155.1	154.6	150.6	145	139	128.6	124	120.7
	1500	258.6	258.6	257.6	250.8	241.7	231.8	214.4	206.6	201.1
	2500	430.9	430.9	429.4	418.2	402.8	386.2	357.1	344.3	335.3

Material Group	Pressure Class	Maximum Temperature Allowed								
		-29 to 38	50	100	150	200	250	300	325	350
		Maximum Pressure Allowed (bar)								
S31803 Duplex S32750 Super Duplex	150	20	19.5	17.7	15.8	13.8	12.1	10.2	9.3	8.4
	300	51.7	51.7	50.7	45.9	42.7	40.5	38.9	38.2	37.6
	400	68.9	68.9	67.5	61.2	56.9	53.9	51.8	50.9	50.2
	600	103.4	103.4	101.3	91.9	85.3	80.9	77.7	76.3	75.3
	900	155.1	155.1	152	137.8	128	121.4	116.6	114.5	112.9
	1500	258.6	258.6	253.3	229.6	213.3	202.3	194.3	190.8	188.2
	2500	430.9	430.9	422.2	382.7	355.4	337.2	323.8	318	313.7

Functional Specifications

Material Group	Pressure Class	Maximum Temperature Allowed								
		-29 to 38	50	100	150	200	250	300	325	350
		Maximum Pressure Allowed (bar)								
AISI316L	150	15.9	15.3	13.3	12	11.2	10.5	10	9.3	8.4
	300	41.4	40	34.8	31.4	29.2	27.5	26.1	25.5	25.1
	400	55.2	53.4	46.4	41.9	38.9	36.6	34.8	34	33.4
	600	82.7	80	69.6	62.8	58.3	54.9	52.1	51	50.1
	900	124.1	120.1	104.4	94.2	87.5	82.4	78.2	76.4	75.2
	1500	206.8	200.1	173.9	157	145.8	137.3	130.3	127.4	125.4
	2500	344.7	333.5	289.9	261.6	243	228.9	217.2	212.3	208.9

Material Group	Pressure Class	Maximum Temperature Allowed								
		-29 to 38	50	100	150	200	250	300	325	350
		Maximum Pressure Allowed (bar)								
AISI316	150	19	18.4	16.2	14.8	13.7	12.1	10.2	9.3	8.4
	300	49.6	48.1	42.2	38.5	35.7	33.4	31.6	30.9	30.3
	400	66.2	64.2	56.3	51.3	47.6	44.5	42.2	41.2	40.4
	600	99.3	96.2	84.4	77	71.3	66.8	63.2	61.8	60.7
	900	148.9	144.3	126.6	115.5	107	100.1	94.9	92.7	91
	1500	248.2	240.6	211	192.5	178.3	166.9	158.1	154.4	151.6
	2500	413.7	400.9	351.6	320.8	297.2	278.1	263.5	257.4	252.7

Humidity Limits	0 to 100% RH
Damping Adjustment	User configurable from 0 to 128 seconds (via digital communication).

Performance Specifications

Reference Conditions	Span starting at zero, temperature of 25°C (77°F), atmospheric pressure, power supply of 24 Vdc, silicone oil fill fluid, isolating diaphragms in 316L SST and digital trim equal to lower and upper range values.
Accuracy	**For differential and gage transmitters ranges 1, 2, 3, 4, 5 and 6:** **0.1 URL ≤ span ≤ URL:** ± 0.075% of span **0.025 URL ≤ span < 0.1 URL:** ± [0.0375 + 0.00375 URL/span]% of span **0.0085 URL ≤ span < 0.025 URL:** ± [0.0015+0.00465 URL/span]% of span **For Absolute transmitters ranges 2, 3, 4, 5 and 6, diaphragms in Tantalum or Monel or fill fluid in Fluorolube:** **0.1 URL ≤ span ≤ URL:** ± 0.1% of span **0.025 URL ≤ span < 0.1 URL:** ± [0.05 + 0.005 URL/span]% of span **0.0085 URL ≤ span < 0.025 URL:** ± [0.01 + 0.006 URL/span]% of span **For range 0, differential and gage models, diaphragms in SST 316L and fill fluid in Silicone or Halocarbon:** **0.2 URL ≤ span ≤ URL:** ± 0.1% of span **0.05 URL ≤ span < 0.2 URL:** ± [0.025 + 0.015 URL/span]% of span **For Absolute, range 1:** 0.2% of span Linearity, hysteresis and repeatability effects are included.
Stability	**For ranges 2, 3, 4, 5 and 6:** ± 0.15% of URL for 5 years at 20 °C temperature change and up 7 MPa (1000 psi) of static pressure **For ranges 0 and 1:** ± 0.2% of URL for 12 months at 20 °C temperature change and up to 100 kPA (1 bar) of static pressure **For level transmitters:** ± 0.2% of URL for 12 months at 20 °C temperature change
Temperature Effect	**For ranges 2, 3, 4, 5 and 6:** **0.2 URL ≤ span ≤ URL:** ± [0.02% URL + 0.06% span] per 20 °C (36 °F) **0.0085 URL ≤ span < 0.2 URL:** ± [0.023% URL + 0.045% span] per 20 °C (36 °F) **For range 1:** **0.2 URL ≤ span ≤ URL:** ± [0.08% URL + 0.05% span] per 20 °C (36 °F) **0.025 URL ≤ span < 0.2 URL:** ± [0.06% URL + 0.15% span] per 20 °C (36 °F) **For range 0:** **0.2 URL ≤ span ≤ URL:** ± [0.15% URL + 0.05% span] per 20 °C (36 °F) **0.05 URL ≤ span < 0.2 URL:** ± [0.1% URL + 0.3% span] per 20 °C (36 °F) **For LD303L:** 6 mmH_2O per 20 °C for 4” and DN100 17 mmH_2O per 20 °C for 3” and DN80 Consult for other flange dimensions and fill fluid.

Performance Specifications	
Static Pressure Effect	**Zero error:** **For ranges 2, 3, 4, 5 and 6:** ± 0.033% of URL per 7MPa (1000 psi) **For range 1:** ± 0.05% of URL per 1.7 MPa (250 psi) **For range 0:** ± 0.1% of URL per 0.5 MPa (5 bar) **For level transmitters:** ± 0.1% of URL per 3.5 MPa (500 psi) The zero error is a systematic error that can be eliminated by calibrating at the operating static pressure. **Span error:** **For ranges 2, 3, 4, 5 and 6:** correctable to ± 0.2% of reading per 7MPa (1000 psi) **For range 1and level transmitters:** correctable to ± 0.2% of reading per 3.5 MPa (500 psi) **For range 0:** correctable to ± 0.2% of reading per 0.5 MPa (5 bar)
Power Supply Effect	± 0.005% of calibrated span per volt
Mounting Position Effect	Zero shift of up to 250 Pa (1 inH_2O) which can be calibrated out. No span effect.
Electromagnetic Interference Effect	Approved according to IEC61326-1:2006, IEC61326-2-3:2006, IEC61000-6-4:2006, IEC61000-6-2:2005.

NOTE
URL = Upper range limit. **LRL =** Lower range limit.

Physical Specifications	
Electrical Connection	1/2 - 14 NPT M20 X 1.5 PG 13.5 DIN 3/4 - 14 NPT (with 316 SST adapter for 1/2 - 14 NPT) 3/4 - 14 BSP (with 316 SST adapter for 1/2 - 14 NPT) 1/2 - 14 BSP (with 316 SST adapter for 1/2 - 14 NPT) **Note:** Explosion Proof approvals do not apply to adapter, only to Transmitter.
Process Connection	1/4 - 18 NPT or 1/2 -14 NPT (with adapter) For L models see Ordering Code. See Ordering Code for more options.
Wetted Parts	**Isolating Diaphragms:** 316L SST, Hastelloy C276, Monel 400 or Tantalum **Drain/Vent Valves and Plug:** 316 SST, Hastelloy C276 or Monel 400 **Flanges:** Plated Carbon Steel, 316 Stainless Steel - CF8M (ASTM - A351), Hastelloy C276 (CW-12MW, ASTM - A494) or Monel 400 **Wetted O-Rings (For Flanges and Adapters):** Buna N, Viton™, PTFE or Ethylene-Propylene. The LD303 is available in NACE MR-01-75/ISO 15156 compliant materials.
Nonwetted Parts	**Electronic Housing:** Injected aluminum with polyester painting, epoxy painting or 316 SST - CF8M (ASTM - A351) housing. Complies with NEMA 4X/6P, IP66 or IP66W*, IP68 or IP68W*. **The IP66/68W sealing test (immersion) was performed at 1 bar for 24 hours. For any other situation, please consult Smar. IP66/68W tested for 200h to according NBR 8094 / ASTM B 117 standard.* **Blank Flange:** When flange adapter and Drain/Vent material is carbon steel, blank flange is in carbon steel, otherwise blank flange is in 316 SST - CF8M (ASTM - A351) **Level Flange (LD303L):** 316 L SST, 304 SST, Hastelloy C276 and Plated Carbon Steel. **Fill Fluid:** Silicone, Fluorolube, Krytox, Halocarbon 4.2 or Fomblim oils **Cover O-Rings:** Buna N **Mounting Bracket:** Plated carbon steel or 316 SST Accessories (bolts, nuts, washers and U-clamps) in carbon steel or 316 SST **Flange Bolts and Nuts:** Plated carbon steel, Grade 8 or 316 SST For NACE applications: carbon steel ASTM A193 B7M **Identification Plate:** 316 SST

Physical Specifications	
Mounting	a) Flange mounted for Level models. b) Optional universal mounting bracket for surface or vertical/horizontal 2"-pipe (DN 50). c) Manifold Valve integrated to the transmitter. d) Directly on piping for closely coupled transmitter/orifice flange combinations.
Approximate Weights	3.15 kg (7 lb): all models, except L models. 5.85 to 9.0 kg (13 lb to 20 lb): L models depending on the flanges, extension and materials.
Control Functions Characteristics (Optional)	Function Blocks: Transducer (TRD), Display Transducer (DSP), Analog Input (AI) and Totalization (TOT).

Technical Characteristics of High Performance - CODE L1

High Performance option (code L1) is available under the following conditions only:

Application	Differential and Gage
Range	D2 -50 to 50 kPa -200 to 200 inH_2O D3 -250 to 250 kPa -36 to 36 psi D4 -2500 to 2500 kPa -360 to 360 psi M2 -50 to 50 kPa -200 to 200 inH_2O M3 -100 to 250 kPa -14.5 to 36 psi M4 -100 to 2500 kPa -14.5 to 360 psi
Diaphragm Material	316L SST Hastelloy C276
Fill fluid	Silicone

Performance Specifications	
Reference Conditions	Span starting at zero, temperature of 25 °C (77 °F), atmospheric pressure, power supply of 24 Vdc, silicone oil fill fluid, isolating diaphragms in 316L SST and digital trim equal to lower and upper range values.
Accuracy	**RANGE 2:** **0.2 URL ≤ span ≤ URL:** ± 0.04% of span **0.05 URL ≤ span < 0.2 URL:** ± [0.021667 + 0.003667 URL/span]% of span **0.0085 URL ≤ span < 0.05 URL:** ± [0.0021 + 0.004645 URL /span]% of span **RANGES 3 and 4:** **0.1 URL ≤ span ≤ URL:** ± 0.05% of span; **0.05 URL ≤ span < 0.1 URL:** ± [0.005 + 0.045 URL/span]% of span **0.0085 URL ≤ span < 0.05 URL:** ± [0.0021+ 0.004645 URL/span]% of span
Stability	**For range 2:** ± 0.05% of URL for 6 months **For range 3:** ± 0.075% of URL for 12 months **For range 4:** ± 0.1% of URL for 24 months ± 0.2% of URL for 12 years, at 20 °C temperature change and up to 7 MPa (1000 psi) {70 bar} of static pressure, environment free of hydrogen migration.
Temperature Effect	**From -10 °C to 50 °C, protected from direct sun radiation:** **0.2 URL ≤ span ≤ URL:** ± [0.018% URL + 0.012% span] per 20 °C (68 °F) **0.0085 URL ≤ span < 0.2% URL:** ± [0.002% URL + 0.002% span] per 20 °C (68 °F)
Static Pressure Effect	**Zero error:** ± 0.025% URL per 7MPa (1000 psi) The zero error is systematic and can be eliminated by calibrating at the operating static pressure. **Span error:** Correctable to ± 0.2% of reading per 7 MPa (1000 psi)

NOTES		
Hasteloy is a trademark of the Cabot Corp. Monel is a trademark of International Nckel Co. Viton and Teflon are trademarks of E. I. DuPunt de Nemours & Co	Fluorolube is a trademark of Hooker Chemical Corp. Halocarbon is a trademark of Halocarbon. Profibus is a trademark of Profibus International	Smar Pressure Transmitters are protected by US patent number 6,433,791

Ordering Code

MODEL	DIFFERENTIAL , FLOW, GAGE, ABSOLUTE AND HIGH STATIC PRESSURE TRANSMITTER
LD303	PROFIBUS PA

COD.	Type	Range Limits Min.	Range Limits Max.	Min. Span	Unit	Range Limits Min.	Range Limits Max.	Min. Span	Unit
D0	Differential and Flow	-1	1	0.05	kPa	-4	4	0.2	inH_2O
D1	Differential and Flow	-5	5	0.13	kPa	-20	20	0.5	inH_2O
D2	Differential and Flow	-50	50	0.42	kPa	-200	200	1.67	inH_2O
D3	Differential and Flow	-250	250	2.08	kPa	-36	36	0.3	psi
D4	Differential and Flow	-2500	2500	20.83	kPa	-360	360	3	psi
M0	Gage	-1	1	0.05	kPa	-4	4	0.2	inH_2O
M1	Gage	- 5	5	0.13	kPa	-20	20	0.5	inH_2O
M2	Gage	- 50	50	0.42	kPa	-200	200	1.67	inH_2O
M3	Gage	-100	250	2.08	kPa	-14.50	36	0.3	psi
M4	Gage	-100	2500	20.83	kPa	-14.50	360	3	psi
M5	Gage	- 0.1	25	0.21	MPa	-14.50	3600	30	psi
M6	Gage	- 0.1	40	0.33	MPa	-14.50	5800	48.3	psi
A1	Absolute	0	5	2.00	kPa	0	37	14.8	mmHga
A2	Absolute	0	50	2.50	kPa	0	7.2	0.36	psia
A3	Absolute	0	250	5.00	kPa	0	36	0.73	psia
A4	Absolute	0	2500	20.83	kPa	0	360	3	psia
A5	Absolute	0	25	0.21	Mpa	0	3600	30	psia
A6	Absolute	0	40	0.33	MPa	0	5800	48.3	psia
H2	Differential – High Static Pressure	-50	50	0.42	kPa	-200	200	1.67	inH_2O
H3	Differential – High Static Pressure	-250	250	2.08	kPa	-36	36	0.3	psi
H4	Differential – High Static Pressure	-2500	2500	20.83	kPa	-360	360	3	psi
H5	Differential – High Static Pressure	-25	25	0.21	MPa	-3600	-3600	30	psi

NOTE: The range can be extended up to 0.75 LRL* and 1.2 URL** with small degradation of accuracy.

*LRL = Lower Range Limit.
**URL = Upper Range Limit.

COD. Diaphragm Material and Fill Fluid

COD.			COD.			COD.		
1	316 SST	Silicone Oil **(9)**	8	Tantalum	Inert Oil Fluorolube **(2) (3) (15)**	K	Monel 400	Inert Oil Krytox **(1) (3) (15)**
2	316 SST	Inert Oil Fluorolube **(2) (15)**	9	316L SST	Fomblim Oil	M	Monel 400 Gold Plated	Silicone Oil **(1) (3) (9)**
3	Hastelloy C276	Silicone Oil **(1) (9)**	A	Monel 400	Fomblim Oil **(1) (3)**	P	Monel 400 Gold Plated	Inert Oil Krytox **(1) (3) (15)**
4	Hastelloy C276	Inert Oil Fluorolube **(1) (2) (15)**	D	316L SST	Inert Oil Krytox **(3) (15)**	Q	316 SST	Inert Oil Halocarbon 4.2 **(2) (3) (15)**
5	Monel 400	Silicone Oil **(1) (3) (9)**	E	Hastelloy C276	Inert Oil Krytox **(1) (3) (15)**	R	Hastelloy C276	Inert Oil Halocarbon 4.2 **(2) (3) (15)**
7	Tantalum	Silicone Oil **(3) (9)**	G	Tantalum	Inert Oil Krytox **(3) (15)**	S	Tantalum	Inert Oil Halocarbon 4.2 **(2) (3) (15)**

COD. Flange(s), Adapter(s) and Drain/Vent Valves Material

C	Plated CS (Drain/Vent in Stainless Steel) **(16)**	M	Monel 400 **(1)**
H	Hastelloy C276 (CW-12MW, ASTM-A494) **(1)**	N	316 SST – CF8M (ASTM A351) (Drain/Vent in Hastelloy C276) **(1)**
I	316 SST – CF8M (ASTM A351)	P	316 SST – CF8M (ASTM A351) Flange with PVDF (Kynar) Insert **(4) (5) (7) (11)**

COD. Wetted O-Rings Materials

0	Without O'Rings	K	Kalrez **(3)**
B	Buna N	T	Teflon
E	Ethylene – Propylene **(12)**	V	Viton

Note: O-Rings are not available on the sides with remote Seals.

COD. Drain/Vent Position

O	Without Drain/Vent	D	Bottom
A	Drain/Vent (Opposite to Process Connection)	U	Top

Note: For better drain/vent operation, vent valves are strongly recommended. Drain/Vent valve are not available on the sides with remote seals

COD. Local Indicator

0	Without Indicator	1	With Digital Indicator

COD. Process Connections

0	1/4 - 18 NPT (Without Adapter)	B	High Side : 1/2 - 14 NPT and Low Side : Remote Seal (With Plug) **(10) (12)**
1	1/2 - 14 NPT With Adapter)	D	High Side : Remote Seal (With Plug) and Low Side – 1/2 - 14 NPT **(10) (12)**
3	Remote Seal (With Plug) **(3) (8)**	F	High Side : 1/2 - 14 NPT and Low Side - Remote Seal (Low Volume Flange) **(10) (12)**
5	1/2 - 14 NPT Axial with PVDF Insert **(5) (7) (14)**	H	High Side : Remote Seal (Low Volume Flange) and Low Side -1/2 – 14 NPT **(10) (12)**
9	Remote Seal (Low Volume Flange **(3) (4) (8)**	Q	8mm hole without thread. According to DIN 19213 **(13)**
T	1/2 - 14 BSP (With Adapter)	Z	User's specification
V	Manifold Valve Integrated to the Transmitter		

COD. Electrical Connections

0	1/2 - 14 NPT **(17)**	A	M20 X 1.5 **(19)**
1	3/4 - 14 NPT with 316 SST adapter for 1/2 - 14 NPT) **(18)**	B	PG 13.5 DIN **(20)**
2	3/4 - 14 BSP with 316 SST adapter for 1/2 - 14 NPT) **(6)**	Z	User's specification
3	1/2 - 14 BSP with 316 SST adapter for 1/2 - 14 NPT) **(6)**		

COD. Zero Span Adjustment

1	With Zero and Span Adjustment

COD. Mounting Bracket for 2" Pipe or Surface Mounting

0	Without Bracket	7	Carbon steel bracket. Accessories: 316 SST **(16)**
1	Carbon steel bracket and accessories **(16)**	9	L Type, carbon steel bracket. Accessories: 316 SST **(16)**
2	316 SST bracket and accessories	A	Flat, 304 SST bracket and 316 SST accessories
5	L type, carbon steel bracket and accessories **(16)**	Z	User's specification
6	L type, 316 SST bracket and accessories		

COD. Continues next page

LD303	D2	1	I	B	U	1	0	0	1	2	*

⬅ TYPICAL MODEL NUMBER

Notes	
(1) Meets NACE MR – 01 – 75/ISO 15156 recommendations.	**(11)** O'Ring should be Viton or Kalrez.
(2) Not available for absolute models nor vacuum applications.	**(12)** Not available for range 0.
(3) Not available for range 0 and 1.	**(13)** Only available for pressure transmitters D4 or H4 and 7/16 UNF or M10 x 1.5 flange thread for fixing accessories.
(4) Not recommended for vacuum service.	**(14)** Only available for flange with PVDF (Kynar) insert.
(5) Maximum pressure 24 bar (350 psi).	**(15)** Inert Fluid: Safe for oxygen service.
(6) Options not certified for use in hazardous locations.	**(16)** Not applicable for saline atmosphere.
(7) Drain/Vent not applicable.	**(17)** Certificate for use in Hazardous Locations (CEPEL, NEPSI, NEMKO, EXAM, FM, CSA).
(8) For remote seal only 316 SST – CF8M (ASTM A351) flange is available (thread 7/16 UNF).	**(18)** Certificate for use in Hazardous Locations (CEPEL, CSA).
(9) Silicone Oil is not recommended for oxygen (O2) or Chlorine service.	**(19)** Certificate for use in Hazardous Locations (CEPEL, NEPSI, NEMKO, EXAM).
(10) Only available for differential pressure transmitters.	**(20)** Certificate for use in Hazardous Locations (CEPEL, NEPSI, NEMKO, EXAM).

LD303 — **DIFFERENTIAL, FLOW, GAGE, ABSOLUTE AND HING STATIC PRESSURE TRANSMITTERS (CONTINUATION)**

COD.	Flanges Bolts and Nuts Material
A0	Plated Carbon Steel (Default) **(4)**
A1	316 SST
A2	Carbon Steel (ASTM A193 B7M) **(1) (4)**
A5	Hastelloy C276

COD.	Flange Thread for Fixing Accessories (Adapters, Manifolds, Mounting Brackets, etc)
D0	7/16" UNF (Default)
D1	M10 X 1.5
D2	M12 X 1.75

COD.	Housing Material (6) (7)
H0	Aluminum (Default) (IP/TYPE)
H1	316 SST – CF8M (ASTM – A351) IP/TYPE)
H2	Aluminium for saline atmosphere (IPW/TYPEX) **(5)**
H3	316 SST for saline atmosphere (IPW/TYPEX) **(5)**
H4	Copperfree Aluminium (IPW/TYPEX) **(5)**

COD.	Tag Plate
J0	With tag, when specified (Default)
J1	Blank
J2	According to user's notes

COD.	Identification Plate
I1	FM: XP, IS, NI, DI
I3	CSA: XP, IS, NI, DI
I4	EXAM (DMT): Ex-ia
I5	CEPEL: Ex-d, Ex-ia
I6	Without Certification
I7	EXAM (DMT): Group I, M1 Ex-ia
IF	CEPEL: Ex-d
IE	NEPSI: Ex-ia

COD.	Painting
P0	Gray Munsell N 6.5 Polyester
P3	Black Polyester
P4	White Epoxy
P5	Yellow Polyester
P8	Without Painting
P9	Blue Safety Epoxy – Electrostatic Painting
PC	Blue Safety Polyesters – Electrostatic Painting

LD303 - D21I - BU10 - 012	A0	D0	H0	J0	I6	P0	*

TYPICAL MODEL NUMBER

Optional Items

*** Leave blank for no optional items**

Burn-out	**BD –** Down Scale (Accordance to NAMUR NE43 specification). **BU –** Up Scale (Accordance to NAMUR NE43 specification).
Special Applications	**C1 –** Degrease Cleaning (Oxygen or Chlorine Service) **(3)**.
High Performance	**L1 –** 0.04% accuracy **(2)**.
Square Root Extraction	**M3 –** With Square Root extraction.
Special Features	**ZZ –** User's specification.

Notes

(1) Meets NACE MR – 01 – 75/ISO 15156 recommendations.
(2) Only available for differential and gage pressure models.
(3) Degrease cleaning not available for carbon steel flanges.
(4) Not applicable for saline atmosphere.
(5) IP66/68W tested for 200 hours according to NBR 8094 / ASTM B 117 standard.
(6) IPX8 tested in 10 meters of water column for 24 hours.
(7) Ingress Protection:

Product	CEPEL	NEMKO/EXAM	FM	CSA	NEPSI
LD300	IP66/68W	IP66/68W	Type4X/6(6P)	Type4X	IP67

MODEL	FLANGED PRESSURE TRANSMITTERS
LD303	PROFIBUS PA

COD.	Range Limits Min.	Range Limits Max.	Min. Span	Unit	Range limits Min.	Range limits Max.	Min. Span	Unit
L2	-50	50	1.25	kPa	-200	200	5	inH_2O
L3	-250	250	2.08	kPa	-36	36	0.3	psi
L4	-2500	2500	20.83	kPa	-360	360	3	psi
L5	-25000	25000	208.3	kPa	-3625	3625	30.2	psi

Note: The range can be extended up to 0.75 LRL and 1.2 URL with small degradation of accuracy. The upper range value must be limited to the flange rating.

COD. Diaphragm material and Fill Fluid (Low Side)

COD.	Material	Fill Fluid
1	316L SST	Silicone Oil **(2)**
2	316L SST	Inert Oil Fluorolube**(3)(19)**
3	Hastelloy C276	Silicone Oil **(1) (2)**
4	Hastelloy C276	Inert Oil Fluorolube **(1)(3)(19)**
5	Monel 400	Silicone Oil **(1) (2)**
7	Tantalum	Silicone Oil **(2)**
8	Tantalum	Inert Oil Fluorolube **(3) (19)**
9	316L SST	Fomblim Oil
A	Monel 400	Fomblim Oil **(1)**
D	316L SST	Inert Oil Krytox **(19)**
E	Hastelloy C276	Inert Oil Krytox **(1)(19)**
G	Tantalum	Inert Oil Krytox **(19)**
K	Monel 400	Inert Oil Krytox **(1) (19)**
M	Monel 400 Gold Plated	Silicone Oil **(1) (2)**
P	Monel 400 Gold Plated	Inert Oil Krytox **(1) (19)**
Q	316L SST	Inert Oil Halocarbon 4.2 **(19)**
R	Hastelloy C276	Inert Oil Halocarbon 4.2 **(1) (19)**
S	Tantalum	Inert Oil Halocarbon 4.2 **(19)**

COD. Flange, Adapter and Drain/Vent Valves material (Low Side)

COD.	Material
A	304L SST
C	Plated CS (Drain/Vent in Stainless Steel) **(20)**
H	Hastelloy C276 (CW – 12MW, ASTM – A494) **(1)**
I	316 SST – CF8M (ASTM – A351)
M	Monel 400 **(1)**
N	316 SST – CF8M (ASTM – A351) (Drain/Vent in Hastelloy C276) **(1)**
P	316 SST – CF8M (ASTM – A351) Flange with PVDF (Kynar) insert **(3) (4) (5)**

COD. Wetted O'Ring Material (Low Side)

COD.	Material
0	Without O'Rings
B	Buna-N
E	Ethylene - Propylene
K	Kalrez
T	Teflon
V	Viton

Note: O'rings are not available on the sides with remote seals.

COD. Drain/Vent Position (Low Side)

COD.	Position
0	Without Drain/Vent
A	Drain/Vent (Opposite to Process Connection)
D	Bottom
U	Top

Note: For better Drain/Vent operation, vent valves are strongly recommended. Drain/Vent valve are not available on the sides with remote seals.

COD. Local Indicator

COD.	Indicator
0	Without Indicator
1	With Digital indicator

COD. Process Connection (Low Side)

COD.	Connection
0	1/4 - 18 NPT (Without Adapter)
1	1/2 - 14 NPT (With Adapter)
3	Remote Seal (With Plug) **(7)**
5	1/2 - 14 NPT Axial with PVDF Insert (**3**) **(4) (6)**
9	Remote Seal (Low Volume Flange) **(3) (7)**
T	1/2 14 BSP (With Adapter)
U	Low Volume Flange For Level Welded
V	Without Connection (Mounting With Gage Flange)
W	Without Connection (Absolut Reference)

COD. Electrical Connection

COD.	Connection
0	1/2 – 14 NPT **(25)**
1	3/4 – 14 NPT (with 316 SST adapter for ½ - 14 NPT) **(22)**
2	3/4 – 14 BSP (with 316 SST adapter for ½ - 14 NPT) **(9)**
3	1/2 – 14BSP (with 316 SST adapter for ½ - 14 NPT) **(9)**
A	M20 x 1.5 **(26)**
B	PG 13.5 DIN **(27)**
Z	User's specification

COD. Zero and Span Adjust

COD.	Adjust
1	With Zero and Span Adjustment

COD. Process Connection

COD.	Connection
U	1" 150 # (ANSI B16.5) **(30)**
V	1" 300 # (ANSI B16.5) **(30)**
W	1" 600 # (ANSI B16.5) **(30)**
O	1.1/2" 150 # (ANSI B16.5)
P	1.1/2" 300 # (ANSI B16.5)
Q	1.1/2" 600 # (ANSI B16.5)
9	2" 150 # (ANSI B16.5)
A	2" 300 # (ANSI B16.5)
B	2" 600 # (ANSI B16.5)
1	3" 150 # (ANSI B16.5)
2	3" 300 # (ANSI B16.5)
C	3" 600 # (ANSI B16.5)
N	3" 600 # (ANSI B16.5 RTJ)
3	4" 150 # (ANSI B16.5)
4	4" 300 # (ANSI B16.5)
D	4" 600 # (ANSI B16.5)
5	DN 25 PN 10/40 **(30)**
R	DN 40 PN 10/40
E	DN 50 PN 10/40
6	DN 80 PN 10/40
7	DN 100 PN 10/16
8	DN 100 PN 25/40
S	JIS 40A 20K **(23)**
F	JIS 50A 10K **(23)**
T	JIS 50A 40K **(23)**
K	JIS 50A 20K **(23)**
G	JIS 80A 10K **(23)**
L	JIS 80A 20K **(23)**
H	JIS 100A 10K **(23)**
M	JIS 100A 10K **(23)**
Z	User's specification

COD. Type and Flange Material (Level Tap)

COD.	Material
2	316L SST (Integral Flange)
3	Hastelloy C276 (Integral Flange)
4	304 SST (Slip-on Flange)
5	316 SST (Slip-on Flange)
6	Carbon Steel (Slip-on Flange)
Z	User's specification

COD Extension Length

COD	Length
0	0 mm (0")
1	50 mm (2")
2	100 mm (4")
3	150 mm (6")
4	200 mm (8")
Z	User's specification

Note: Extension Material 316L SST

COD. Diaphragm Material / Extension (Level Tap)

COD.	Material
A	304L SST / 304L SST
1	316L SST / 316 SST
2	Hastelloy C276 / 316 SST
3	Monel 400 / 316 SST
4	Tantalum / 316 SST **(10)**
5	Titanium / 316 SST **(10)**
6	316L SST with Teflon Lining (For 2"and 3")
7	316L SST Gold plated
B	Tantalum with Teflon Lining
L	316L SST Halar Plated **(18)**
C	Hastelloy Teflon Plated

COD. Fill Fluid

COD.	Fluid
1	DC – 200/20 Silicone Oil
3	DC704 Silicone Oil
2	MO – 10 Fluorolube Oil **(8)**
4	Krytox Oil
N	Neobee M20 Propylene Glycol Oil
G	Glycerin **(6)**
B	Fomblim 06/06
H	Halocarbon 4.2
T	Syltherm 800 Oil

COD. Housing Material

COD.	Material
0	Without Gaskets **(12)**
1	316 SST
2	Hastelloy C276
3	Super Duplex (UNS 32750) **(11)**
4	Duplex (UNS 31803) **(11)**
5	Stainless Steel 304L **(11)**

COD. Gasket Material

COD.	Material
0	Without gasket
T	Teflon (PTFE)
G	Grafoil (Flexible lead)
C	Copper
I	316 L SST

COD. Continues Next Page

LD303	L2	1	I	B	U	1	0	0	1	1	2	2	1	1	1	T	*

TYPICAL MODEL NUMBER

LD303 — **FLANGED PRESSURE TRANSMITTERS (CONTINUATION)**

COD. Flanges Bolts and Nuts Material
- **A0** Plated Carbon Steel (Default) **(20)**
- **A1** 316 SST
- **A2** Carbon Steel (ASTM A193 B7M) **(1) (20)**
- **A5** Hastelloy C276

COD Flange Thread for Fixing Accessories (Adapters, Manifolds, Mounting Brackets, etc)
- **D0** 7/16" UNF (Default)
- **D1** M10 X 1.5 Thread
- **D2** M12 X 1.75

COD. Flange Facing Finish (16)
- **Q0** Raised Face – RF (Default)
- **Q1** Flat Face – FF
- **Q2** Ring Joint Face – RTJ (Only available for ANSI standard flange) **(15)**
- **Q3** Tongue Face **(11)**
- **Q4** Grooved Face **(11)**

COD. Housing Material (28) (29)
- **H0** Aluminum (Default) (IP/TYPE)
- **H1** 316 SST – CF8M ASTM – A351) (IP/TYPE)
- **H2** Aluminium (IPW/TYPEX) **(21)**
- **H3** 316 SST (IPW/TYPEX) **(21)**
- H4 Copperfree Aluminium (IPW/TYPEX) **(21)**

COD. Tag Plate
- **J0** With tag, when specified (Default)
- **J1** Blank
- **J2** According to user's notes

COD. Identification Plate
- **I1** FM: XP, IS, NI, DI
- **I3** CSA: XP, IS, NI, DI
- **I4** EXAM (DMT): Ex-ia
- **I5** CEPEL: Ex-d, Ex-ia
- **I6** Without Certification
- **I7** EXAM (DMT): Group I, M1 Ex-ia
- **IF** CEPEL: Ex-d
- **IM** BDSR-GOST: Ex-d, Ex-ia

COD. Painting
- **P0** Gray Munsell N6,5 Polyesters
- **P3** Black Polyester
- **P4** White Epoxy
- **P5** Yellow Polyester
- **P8** Without Painting
- **P9** Blue Safety Epoxy – Electrostatic Painting
- **PC** Blue Safety Polyesters – Electrostatic Painting

LD303-L2I-BU10-01-12211	A0	D0	Q0	H0	J0	I6	P0	*

⬅ TYPICAL MODEL NUMBER

Optional Items

*** Leave blank for no optional items**

Burn-out	**BD -** Down Scale (Accordance to NAMUR NE43 specification)	**BU -** Up Scale (Accordance to NAMUR NE43 specification).
Special Applications	**C1 -** Degrease Cleaning (Oxygen or Chlorine Service **(13)**	**C2 -** For vacuum application.
Special Features	**ZZ -** User's specification.	
Gasket Connection	**U0 -** With one Flush Connection ¼" NPT (if supplied with gasket) **U1-** With two Flush Connections ¼" NPT per 180 ºC **U2 -** With two Flush Connections ¼" NPT per 90 ºC **U3 -** With two Flush Connections ½" NPT - 14 NPT per 180 ºC (with cover) **U4** – Without Gasket Connection	
Isolator Kit (14)	**K0 -** Without Kit	**K1 -** With Kit
Diaphragm Thickness	**N0** – Default **(24)**	**N1** - 0.1mm **(11)**

NOTES

(1) Meets NACE MR – 01 – 75/ISO 15156 recommendations.
(2) Silicone Oils not recommendations for Oxygen (O_2) or Chlorine service.
(3) Not applicable for vacuum service.
(4) Drain/Vent not applicable.
(5) O'Ring should be Viton or Kalrez.
(6) Maximum pressure 24 bar.
(7) For remote Seal only 316 SST - CF8M (ASTM A3510 flange is available (thread M12).
(8) Fluorolube fill fluid is not available for Monel diaphragm.
(9) Options not certified for use in hazardous locations.
(10) Attention, check corrosion rate for the process, tantalum plate 0.1 mm, AISI 316L extension 3 to 6mm.
(11) Item by inquiry.
(12) Supplied without Gasket.
(13) Degreaser's cleaning is not available for carbon steel flanges
(14) The insulator kit is applicable with Raised Face (HO) and Smooth Face (H1) with Gasket material.
T(Teflon) and only for the following models:
- For models with extension the Gasket T (Teflon) it has special share.

(15) Gasket for housing, available only in Stainless 316.
(16) Finishing flange faces:
ANSI B 16.5 / MSS-SP6:
- Raised or Smoth Face with gooved lining: 3.2 to 6.3 µm Ra (125 a 250 µ" AA);
  Small or Large Tongue Face and Small or Large Groove with smooth finishing
  not exceeding: 3.2 µm Rt (125 µ" AA);

RTJ ANSI B 16.20 / MSS-SP6:
- Smooth finishing not exceeding: 1.6 µm Rt (63 µ" AA);

DIN EN-1092-1:
- Grooved finishing "B1" (PN 10 a PN40): 3.2 a 12.5 µm Ra (125 a 500 µ" AA);
  Smooth finishing "B2" (PN 63 a PN100), "C" (Tongue) e "D" (Groove): 0.8 a 3.2 µm Ra (32 a 125 µ" AA).

DIN 2501 (DIN 2526):
- Smooth finishing "E" (PN 160 a PN250): Rz = 16 (3.2 µm Ra (125 µ" AA).

Standard JIS B2201
Grooved finishing 3.2 a 6.3 µm Ra (125 a 250 µ" AA).
(17) Range of application of temperature from -40 ºC to 150 ºC.
(18) Applicable only to:
- Thickness of steel: 0.05 mm
- Diameter/capillary length:
  2" ANSI B 16.5 DN 50 DIN, JIS 50 A, for seals up to 3 meters of capillary and level models (by inquiry).
  3" ANSI B 16.5 DN 80 DIN, JIS 80 A, for seals up to 5 meters of capillary and level models.
- Faces: RF and FF;
- Temperature Range: +10 ºC to 100 ºC
  + 101 to 150 º C (by inquiry)
- Not applicable for diaphragm thickness;
- Not applicable for use with gaskets.

(19) Inert Fluid: Oxygen Compatibility, safe for oxygen service.
(20) Not applicable for saline atmosphere.
(21) IP66/68W tested for 200 hours according to NBR 8094 / ASTM B 117 standard.
(22) Certificate for use in Hazardous Locations (CEPEL, CSA).
(23) Not available for slip-on flange.
(24) Diaphragms of Titanium and Monel available only in 0.1 mm, and diaphragms of Tantalum only in 0.075 mm.
(25) Certificate for use in Hazardous Locations (CEPEL, NEPSI, NEMKO, EXAM, FM, CSA).
(26) Certificate for use in Hazardous Locations (CEPEL, NEPSI, NEMKO, EXAM).
(28) Certificate for use in Hazardous Locations (CEPEL, NEPSI, NEMKO, EXAM).
(28) IPX8 tested in 10 meters of water column for 24 hours.
(29) Ingress Protection:

Product	CEPEL	NEMKO/EXAM	FM	CSA	NEPSI
LD300	IP66/68W	IP66/68W	Type4X/6(6P)	Type4X	IP67

(30) Not available for integral flange.

MODEL	SANITARY PRESSURE TRANSMITTERS
LD303	PROFIBUS PA

CODE	Range Limits Min.	Range Limits Max.	Min. Span	Unit	Range Limits Min.	Range Limits Max.	Min. Span	Unit
S2	-50	50	1.25	kPa	-200	200	5	inH_2O
S3	-250	250	2.08	kPa	-36	36	0.3	psi
S4	-2500	2500	20.83	kPa	-360	360	3	psi
S5	-25000	25000	208.30	kPa	-3625	3625	30.2	psi

Note: The range can be extended up to 0.75 LRL and 1.2 URL with small degradation of accuracy. The upper range value must be limited to the connection.

COD – Diaphragm Material and Fill Fluid (Low Side)

1	316L SST	Silicone Oil **(2)**	7	Tantalum	Silicone Oil **(2)**	E	Hastelloy C276	Inert Krytox Oil **(1) (17)**	Q	316L SST	Inert Haloc 4.2 Oil **(17)**
2	316L SST	Inert Fluorolube Oil **(3) (17)**	8	Tantalum	Inert Fluorolube Oil **(3) (17)**	G	Tantalum	Inert Krytox Oil **(17)**	R	Hastelloy C276	Inert Haloc 4.2 Oil **(1) (17)**
3	Hastelloy C276	Silicone Oil **(1) (2)**	9	316L SST	Fomblim Oil	K	Monel 400	Inert Krytox Oil **(1) (17)**	S	Tantalum	Inert Haloc 4.2 Oil **(17)**
4	Hastelloy C276	Inert Fluorolube Oil **(1) (3) (17)**	A	Monel 400	Fomblim Oil **(1)**	M	Monel 400 Gold Plated	Silicone Oil **(1) (2)**			
5	Monel 400	Silicone Oil **(1) (2)**	D	316L SST	Inert Krytox Oil **(17)**	P	Monel 400 Gold Plated	Inert Krytox Oil **(1) (17)**			

CODE – Flange(s), Adapter (s) and Drain Valve(s) Material (Low Side)

C	Plated CS (Drain in Stainless Steel) **(15)**	M	Monel 400 **(1)**
H	Hastelloy C276 (CW-12MW, ASTM - A494) **(1)**	N	316 SST – CF8M (ASTM – A351) (Drain in Hastelloy C276) **(1)**
I	316 SST - CF8M (ASTM - A351)	P	316 SST – CF8M (ASTM – A351) Flange with PVDF (Kynar) insert **(3) (4) (5)**

CODE – Wetted O-Ring Material (Low Side)

0	Without O-Ring	K	Kalrez
B	Buna-N	T	Teflon (Approved 3A)
E	Ethylene - Propylene	V	Viton (Approved 3A)

Note: O-Rings are not available on the sides with remote seal.

CODE – Drain Position (Low Side)

0	Without Drain	D	Bottom
A	Drain (Opposite to process connection)	U	Top

Note: For better drain operation, drain valves are strongly recommended. Drain valve are not available on the sides with remote seal.

CODE – Local Indicator

0	Without Indicator	1	With Digital Indicator

CODE – Process Connection (Low Side)

0	1/4 - 18 NPT (Without Adapter)	T	1/2-14 BSP (With Adapter)
1	1/2 - 14 NPT (With Adapter)	U	Low Volume Flange For Level Welded
3	Remote Seal (With Plug – Vacuum Assembly) **(7)**	V	Without Connection (Mounting With Gage Flange)
5	1/2 - 14 NPT Axial with PVDF insert **(3) (4) (6)**	W	Without Connection (Absolut Reference)
9	Remote Seal (Low Volume Flange) **(3) (7)**		

CODE – Electrical Connection

0	1/2 - 14 NPT **(18)**	A	M20 X 1.5 **(20)**
1	3/4 - 14 NPT (With 316 SST adapter for 1/2 - 14 NPT) **(19)**	B	PG 13.5 DIN **(21)**
2	3/4 - 14 BSP (With 316 SST adapter for 1/2 - 14 NPT) **(9)**	Z	User's Specification
3	1/2 - 14 BSP (With 316 SST adapter for 1/2 - 14 NPT) **(9)**		

CODE – Zero and Span Adjust

1	With Local Adjustment

CODE – Process Connection

8	Threaded DN25 DIN 11851 – with extension **(10)**	E	Threaded SMS 2" – without extension **(10)**
9	Threaded DN40 DIN 11851 - with extension **(10)**	M	Threaded SMS 3" - with extension **(10)**
H	Threaded DN40 DIN 11851 – without extension **(10)**	1	Threaded SMS 3" - without extension **(10)**
V	Threaded DN50 DIN 11851 - with extension **(10)**	F	Tri-Clamp 1 1/2" – without extension
U	Threaded DN50 DIN 11851 - without extension **(10)**	Q	Tri-Clamp 1 1/2" HP (High Pressure) - without extension **(8)**
X	Threaded DN80 DIN 11851 - with extension **(10)**	6	Tri-Clamp 2" - with extension
W	Threaded DN80 DIN 11851 - without extension **(10)**	D	Tri-Clamp 2" – without extension
4	Threaded IDF 2" - with extension **(10)**	N	Tri-Clamp 2" HP (High Pressure) - with extension **(8)**
B	Threaded IDF 2" – without extension **(10)**	P	Tri-Clamp 2" HP (High Pressure) – without extension **(8)**
K	Threaded IDF 3" - with extension **(10)**	I	Tri-Clamp 3" - with extension
3	Threaded IDF 3" - without extension **(10)**	G	Tri-Clamp 3" – without extension
5	Threaded RJT 2" - with extension **(10)**	J	Tri-Clamp 3" HP (High Pressure) - with extension **(8)**
C	Threaded RJT 2" - without extension **(10)**	R	Tri-Clamp 3" HP (High Pressure) – without extension o **(8)**
L	Threaded RJT 3" - with extension **(10)**	A	Tri-Clamp DN50 - with extension
2	Threaded RTJ 3" - without extension **(10)**	O	Tri-Clamp DN50 HP (High Pressure) - with extension **(8)**
S	Threaded SMS 1 1/2" – without extension **(10)**	T	Tri-Clamp DN50 – without extension
7	Threaded SMS 2" - with extension **(10)**	Z	User's specification

CODE – Flange Material (Level Tap)

2	316L SST
Z	User's Specification

CODE – Diaphragm Material

H	Hastelloy C276
I	316L SST

COD – Fill Fluid

S	DC 200 – silicone oil	G	Glycerin + Water **(12)**
D	DC 704 – silicone oil	B	Fomblim 06/06
F	Fluorolube MO-10	K	Krytox 1506
T	Syltherm 800	H	Halocarbom 4.2
N	Neobee M20 (Approved 3A) **(11) (22)**		

CODE – Wet O-ring

0	Without O-ring
T	Teflon
B	Buna-N
V	Viton (Approved 3A) **(11) (22)**

CODE – Tank Adapter

0	Without Tank Adapter
1	With Tank Adapter in 316 SST

CODE – Tri-Clamp

0	Without Tri-Clamp
2	With Tri-Clamp in 304 SST

CODE – Continues next page

LD303	S2	1	I	B	U	1	0	0	1	A	2	I	S	T	1	2	*

TYPICAL MODEL NUMBER

* Leave it blank when there are not optional items.

LD303 — **SANITARY PRESSURE TRANSMITTERS (CONTINUATION)**

CODE	Flange Bolts and Nuts Material
A0	Plated Carbon Steel (Default) **(15)**
A1	316 SST
A2	Carbon Steel (ASTM A193 B7M) **(1) (15)**
A5	Hastelloy C276

CODE	Flange Thread for Fixing Accessories (Adapters, Manifolds, Mounting Brackets, etc)
D0	7/16" UNF (Default)
D1	M10 X 1.5 Thread
D2	M12 X 1.75

CODE	Housing Material (23) (24)
H0	Aluminum (Default) (IP/TYPE)
H1	316 SST – CF8M (ASTM – A351) (IP/TYPE)
H2	Aluminum for Saline Atmosphere (IPW/TYPEX) **(16)**
H3	316 SST for Saline Atmosphere (IPW/TYPEX) **(16)**
H4	Copper Free Aluminium (IPW/TYPEX) **(16)**

CODE	Tag Plate
J0	With tag, when specified (Default)
J1	Blank
J2	According to user's notes

CODE	Identification Plate
I1	FM: XP, IS, NI, DI
I3	CSA: XP, IS, NI, DI
I4	EXAM (DMT): Ex-ia
I5	CEPEL: Ex-d, Ex-ia
I6	Without Certification
I7	EXAM (DMT): Class I, M1 Ex-ia
IF	CEPEL: Ex-d

CODE	Painting
P0	Gray Munsell N 6.5 Polyester
P3	Black Polyester
P4	White Epoxy
P5	Yellow Polyester
P8	Without Painting
P9	Safety Blue Epoxy – Electrostatic Painting
PC	Safety Polyester - Electrostatic Painting

LD303-S21I-BU10-01A2-IST12	A0	D0	H0	J0	I6	P0	*

TYPICAL MODEL NUMBER

Optional Items

* Leave it blank when there are not optional items.

Burn-out	BD - Down Scale (Accordance to NAMUR NE43 specification) BU - Up Scale (Accordance to NAMUR NE43 specification)
Special Procedures	C1 - Degrease Cleaning (Oxygen or Chlorine Service) **(13)** C2 - For Vacuum Application C4 - Polishing of the wet parts according to 3A Certification **(11) (12)**
Special Features	ZZ - User's Specification
Diaphragm Thickness	N0 – Default N1 - 0.1mm **(12)**

Note

(1) Meets NACE MR-01-75/ISO 15156 recommendations.
(2) Silicone oil not recommended for Oxygen (O2) or Chlorine Service.
(3) Not applicable for vacuum service.
(4) Drain not applicable.
(5) O-Ring material must be of Viton or Kalrez.
(6) Maximum pressure 24 bar.
(7) For remote seal is only available flange in 316 Stainless Steel - CF8M (ASTM A351) (thread M12).
(8) HP – High Pressure.
(9) Options not certified for use in hazardous locations.
(10) Not available for Tri-clamp.
(11) 3A-7403 Standard:
- Neobee M2O Fill Fluid
- Finishing wet Face: 0.8 µm Ra (32 µ" AA)
- Wet O-Ring: Viton

(12) Item by inquiry.
(13) Degrease cleaning is not available for Carbon Steel Flanges.
(14) Temperature application range: -40 to 140 °C.
(15) Not applicable for saline atmosphere.
(16) IP66/68W tested for 200 hours according to NBR 8094 / ASTM B 117 standard.
(17) The inert fluid guarantees safety for Oxygen (O_2) service.
(18) Certificate for use in Hazardous Locations (CEPEL, NEPSI, NEMKO, EXAM, FM, CSA).
(19) Certificate for use in Hazardous Locations (CEPEL, CSA).
(20) Certificate for use in Hazardous Locations (CEPEL, NEPSI, NEMKO, EXAM).
(21) Certificate for use in Hazardous Locations (CEPEL, NEPSI, NEMKO, EXAM).
(22) Compliant with 3A-7403 standard for food and other applications where sanitary connections are required.
(23) IPX8 tested in 10 meters of water column for 24 hours.
(24) Ingress Protection:

Product	CEPEL	NEMKO/EXAM	FM	CSA	NEPSI
LD300	IP66/68W	IP66/68W	Type4X/6(6P)	Type4X	IP67

CERTIFICATIONS INFORMATION

European Directive Information

Authorized representative in European Community
Smar Gmbh-Rheingaustrasse 9-55545 Bad Kreuzanach

PED Directive (97/23/EC) – Pressure Equipment Directive
This product is in compliance with the directive and it was designed and manufactured in accordance with sound engineering practice using several standards from ANSI, ASTM, DIN and JIS.

EMC Directive (2004/108/EC) - Eletromagnetic Compatibility
The EMC test was performed according to IEC standard: IEC61326-1:2006, IEC61326-2-3:2006, IEC61000-6-4:2006, IEC61000-6-2:2005. For use in environment only.
Keep the shield insulated at the instrument side, connecting the other one to the ground if necessary to use shielded cable.

ATEX Directive (94/9/EC) – Equipment and protective systems intended for use in potentially explosive atmospheres.
This product was certified according European Standards at NEMKO and EXAM (old DMT). The certified body for manufacturing quality assessment is EXAM (number 0158).

LVD Directive 2006/95/EC – Electrical Equipment designed for use within certain voltage limits
According the LVD directive Annex II the equipment under ATEX “Electrical equipment for use in an explosive atmosphere” directive are excluded from scope from this directive.

Other Approval

Sanitary Approval

Certifier Body: 3A Sanitary Standards
Model Designations: LD303 with or without extension
Sensors and Sensor Fittings and Connections Used on Fluid Milk and Milk Products,
Number: 74-03. (Authorization No. 873).

Documents for manuals
- Label Plate: 101A-1797

IP68 Report:

Certifier Body: CEPEL

Tests for Ingress Protection IP68 – CEPEL DVLA – 7390/05C
This report not apply to harzardous locations Ex d protection and with Drawing 101B-4740-00.
For guarantee the ingress of protection IP68 in the electrical connection input with NPT thread must be applied a threadlocker like Loctite 262.

Documents for manuals:
- Label Plate: 101A-8823

Hazardous Locations Certifications

NOTE
The IP68 sealing test (immersion) was performed at 1 bar for 24 hours. For any other situation, please consult Smar.

North American Certifications

FM Approvals (Factory Mutual)

Certificate N: FM 3006959 and 3015629
Explosion-proof for Class I, Division 1, Groups A, B, C and D.

Dust-ignition proof for Class II, Division 1, Groups E, F and G; Class III, Division 1.
Intrinsically Safe for use in Class I, Division 1, Groups A, B, C and D; Class II, Division 1, Groups E, F and G; Class III, Division 1. FISCO Field Device Ex ia IIC T4.
Non-incendive for Class I, Division 2, Groups A, B, C and D. FNICO Field Device Ex n1 IIC T5.

Entity parameters: V_{max} = 24 Vdc I_{max} = 250 mA Pi = 1.2 W Ci = 5 nF Li = 12 µH
V_{max} = 16 Vdc I_{max} = 250 mA Pi = 2.0 W Ci = 5 nF Li = 12 µH
Maximum Ambient Temperature: 60 ºC.
Enclosure Type 4X/6/6P or Type 4/6/6P.

Canadian Standards Association (CSA)

Certificate N: CSA1111005
Class 2258 02 Explosion Proof for Class I, Division 1, Groups B, C and D; Class II, Division 1, Groups E, F and G; Class III, Division 1; Class I, Division 2, Groups A, B, C and D; Class II, Division 2, Groups E, F and G; Class III. FNICO Field Device Ex n1 IIC T5.

Class 2258 04 Intrinsically Safe, Entity – For Hazardous Locations for Class I, Division 1, Groups A, B, C and D; Class II, Division 1, Groups E, F and G; Class III, Division 1. FISCO Field Device Ex ia IIC T4.
• Intrinsically safe with entity parameters:
Vmax = 24 V Imax = 380 mA Pi = 5.32 W Ci = 5 nF Li = 10 uH.
Maximum Ambient Temperature: 40 ºC.
Enclosure Type 4X or Type 4.

European Certifications

Certificate No: NEMKO 13 ATEX 1574X
Explosion Proof: Group II, Category 2 G, Ex d, Group IIC, Temperature Class T6, EPL Gb

Ambient Temperature: -20 to 60 ºC

Certificate No: NEMKO 13 ATEX 1574X
Environmental Protection: IP66W/68W

Special Conditions for Safe Use
Repairs of the flameproof joints must be made in compliance with the structural specifications provided by the manufacturer. Repairs must not be made on the basis of values specified in tables 1 and 2 of EN/IEC 60079-1

The Essential Health and Safety Requirements are assured by compliance with:
EN 60079-0:2012 General Requirements
EN 60079-1:2007 Flameproof Enclosures “d”

Certificate No: DMT 00 ATEX E 067
ATEX Intrinsically Safe
Group II 1/2G Ex ia IIC T4/T5/T6
Entity parameters: Pi = 5.32 W Ui = 24 V Ii = 380 mA Ci ≤ 5 nF Li = neg.
Ambient Temperature: -40 ºC ≤ Ta ≤ 60 ºC
FISCO Field Device Ex ia IIC T4
FNICO Field Device Ex n1 IIC T4

South America Certification

Certificado No: CEPEL-EX-075/96
Intrinsicamente Seguro – Ex-ia IIC T4/T5
Parâmetros: Pi = 5.32 W Ui = 30 V Ii = 380 mA Ci = 5 nF Li = Neg
Temperatura ambiente: -20 < T_{amb} < 65 ºC para T4;
-20 < T_{amb} < 50 ºC para T5.

FISCO Field Device Ex ia IIC T4
FNICO Field Device Ex n1 IIC T5

Certificado No: CEPEL-EX-54/98
À prova de explosão – Ex-d IIC T6
Temperatura ambiente: 40 ºC
Grau de Proteção: IP 66/68 ou IP66/68W

Asia Certification

Certificate No: Nepsi GYJ04140
Intrinsically safe - Ex ia IIC T4/T5/T6
Entity Parameters: Pi = 2.0 W Ui = 16 V Ii = 250 mA Ci = 5 nF Li = 0

FISCO Field Device Ex ia IIC T4

Identification Plate and Control Drawing

Identification Plate

- Identification of Intrinsically safe and Explosion Proof for gas and steam:

FM

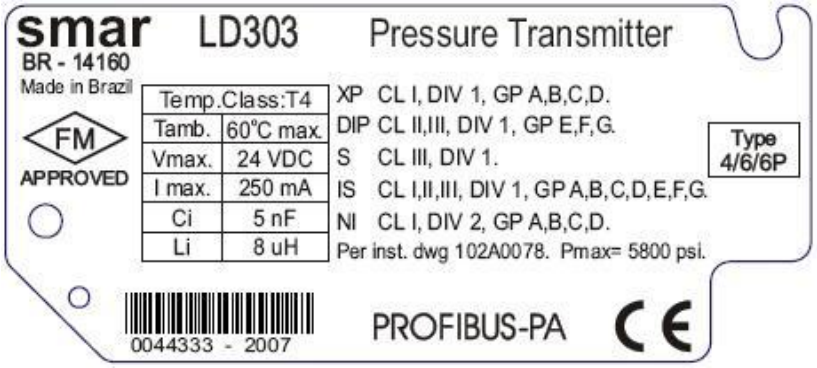

CSA

NEMKO and EXAM

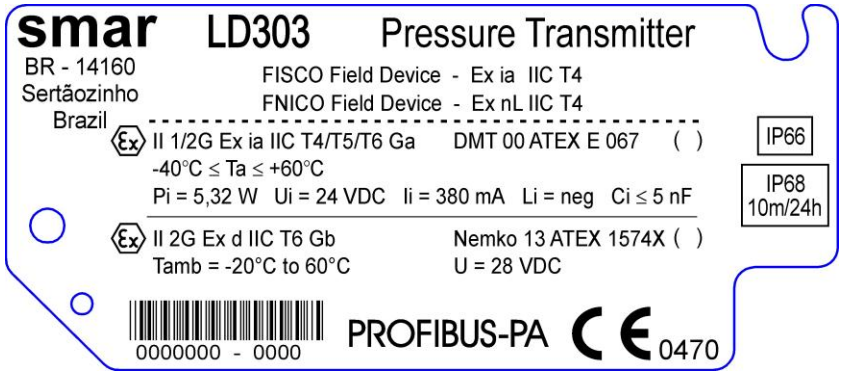

CEPEL

NEPSI

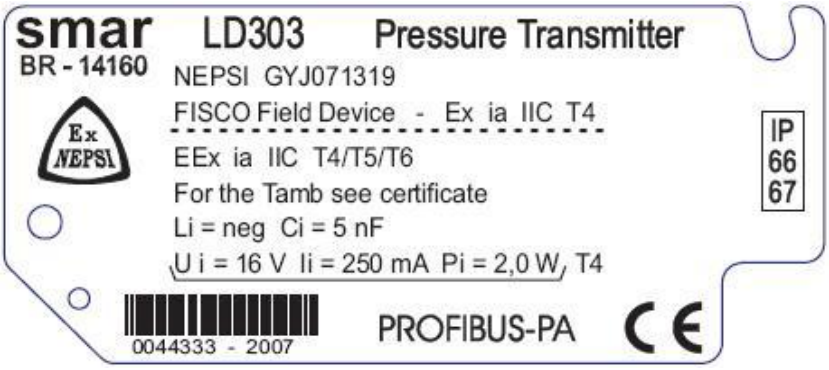

WITHOUT APPROVAL

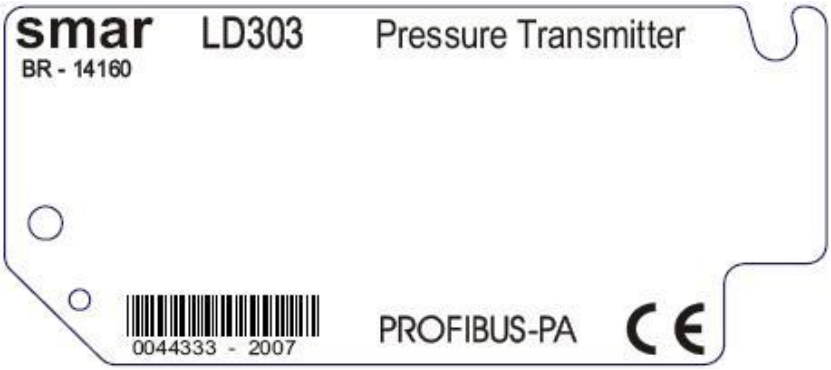

- Identification of Intrinsically safe and Explosion Proof for saline atmospheres:

FM

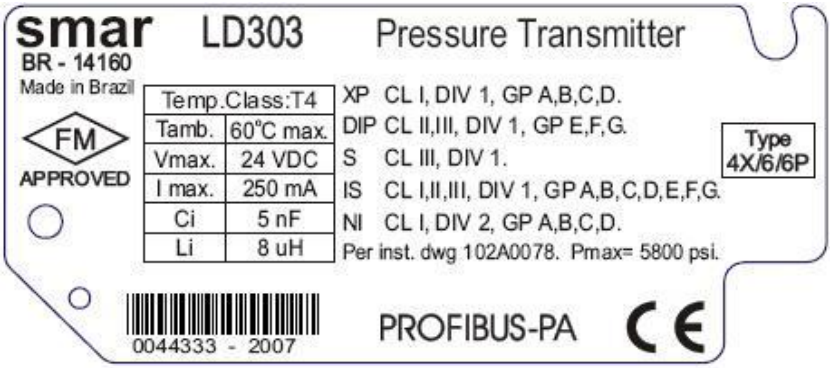

CSA

NEMKO and EXAM

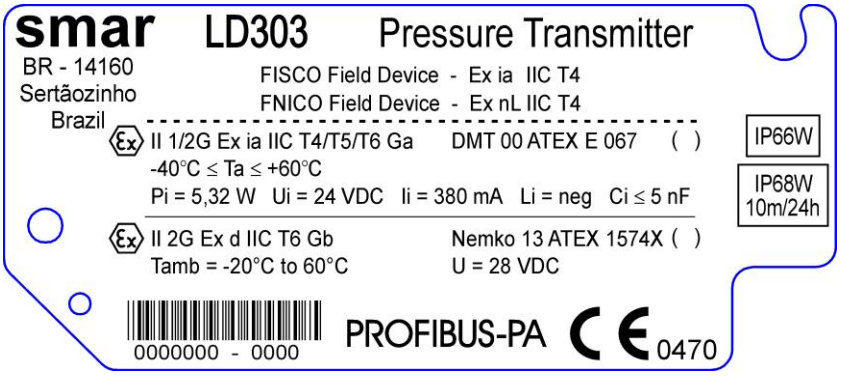

CEPEL

Control Drawing

Factory Mutual (FM)

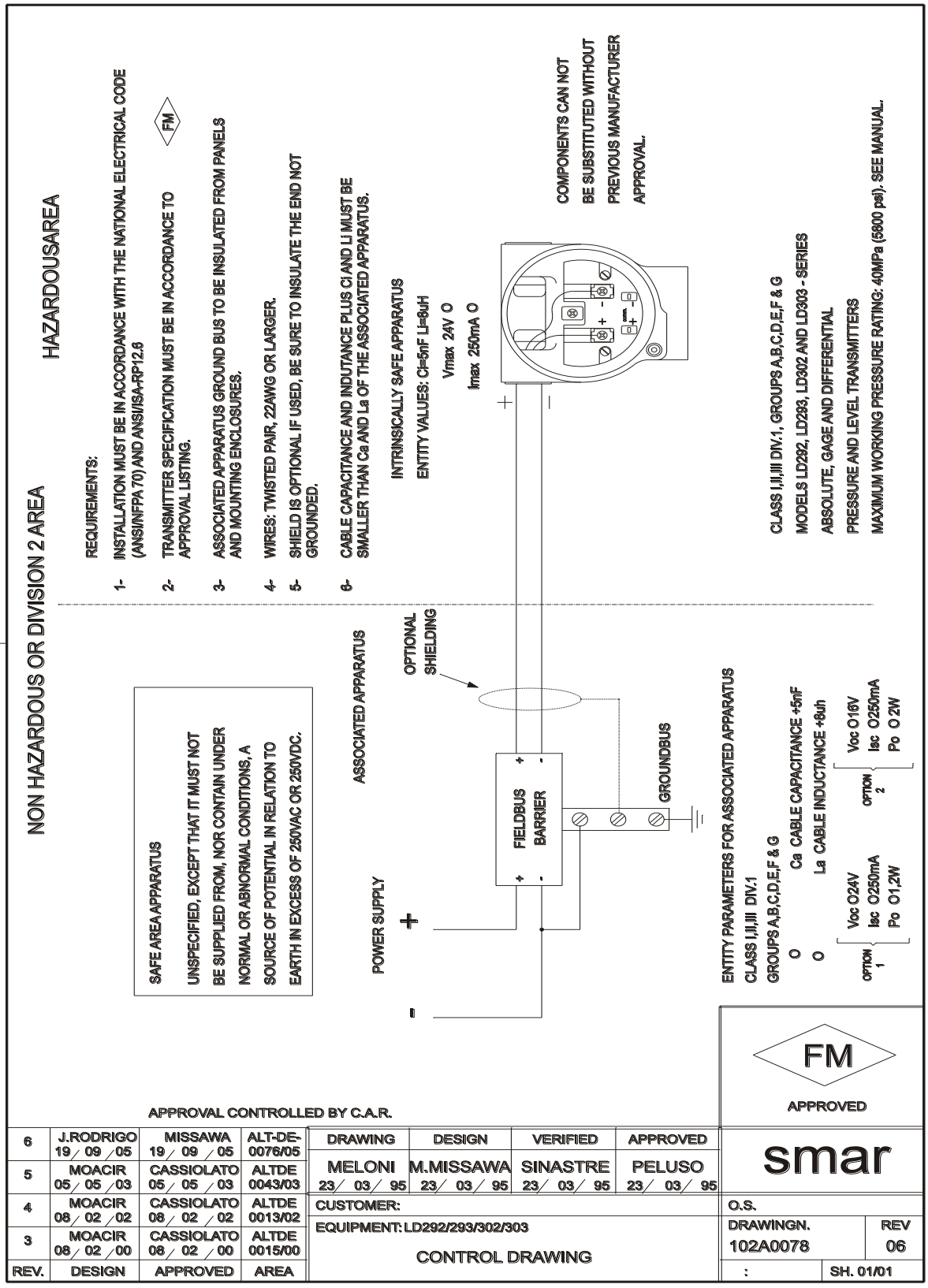

Appendix B

smar	SRF – Service Request Form Pressure Transmitters	Proposal No.: (1)

Company:	Unit:	Invoice:

COMMERCIAL CONTACT		CUSTUMER CONTACT	
Full Name:		Full Name:	
Function:		Function:	
Phone:	Extension:	Phone:	Extension:
Fax:		Fax:	
Email:		Email:	

EQUIPMENT DATA

Model:	Serial Number:	Sensor Number:

Technology: ( ) 4-20 mA ( ) HART® ( ) HART® SIS ( ) WIRELESS HART® ( ) ISP ( ) FOUNDATION fieldbus™ ( ) PROFIBUS PA	Firmware Version:

PROCESS DATA

Process Fluid:

Calibration Range (4)		Ambient Temperature (ºF)		Process Temperature (ºF)	
Min.:	Max.:	Min.:	Max.:	Min.:	Max.:

Process Pressure (4)		Static Pressure (4)		Vacuum (4)		Application (3)
Min.:	Max.:	Min.:	Max.:	Min.:	Max.:	( ) Transmitter ( ) Repeater

Normal Operation Time:	Failure Date:

FAILURE DESCRIPTION
(Please, describe the observed behavior, if it is repetitive, how it reproduces, etc.)

Did device detect the fail? (2) ( ) Yes ( ) No	What is the final value of the current? (2) _____ mA	What is the message in the display? (2)

MAINTENANCE INFORMATION

Did you allow the upgrade in the firmware? ( ) Yes ( ) No	Certification plate: Will it maintained the certification? ( ) Yes ( ) No

Main board configuration:
( ) Original factory configuration ( ) Default configuration
( ) Special configuration (should be informed by the client. Please, use the space below)

OBSERVATIONS

SUBMITTER INFORMATION

Company:

Submitted by: Title: Section:

Phone: Extension: E-mail:

Date: Signature:

For warranty or non-warranty repair, please contact your representative.
Further information about address and contacts can be found on www.smar.com/contactus.asp.

NOTE

(1) This field should be filled out by the Smar. **(2)** Required for SIS devices.	**(3)** Required for Wireless HART® devices. **(4)** Required to specify the pressure unit.